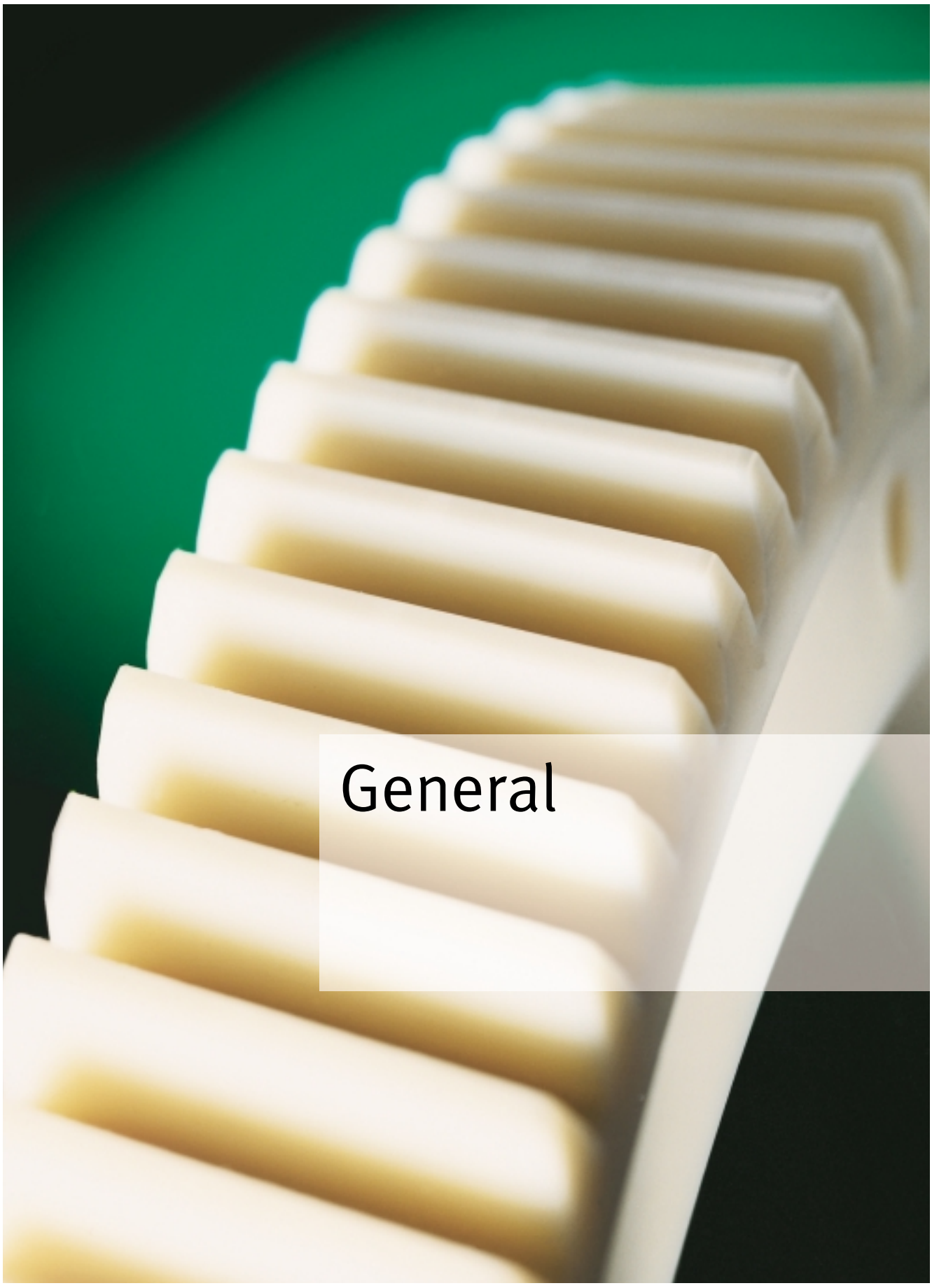

General

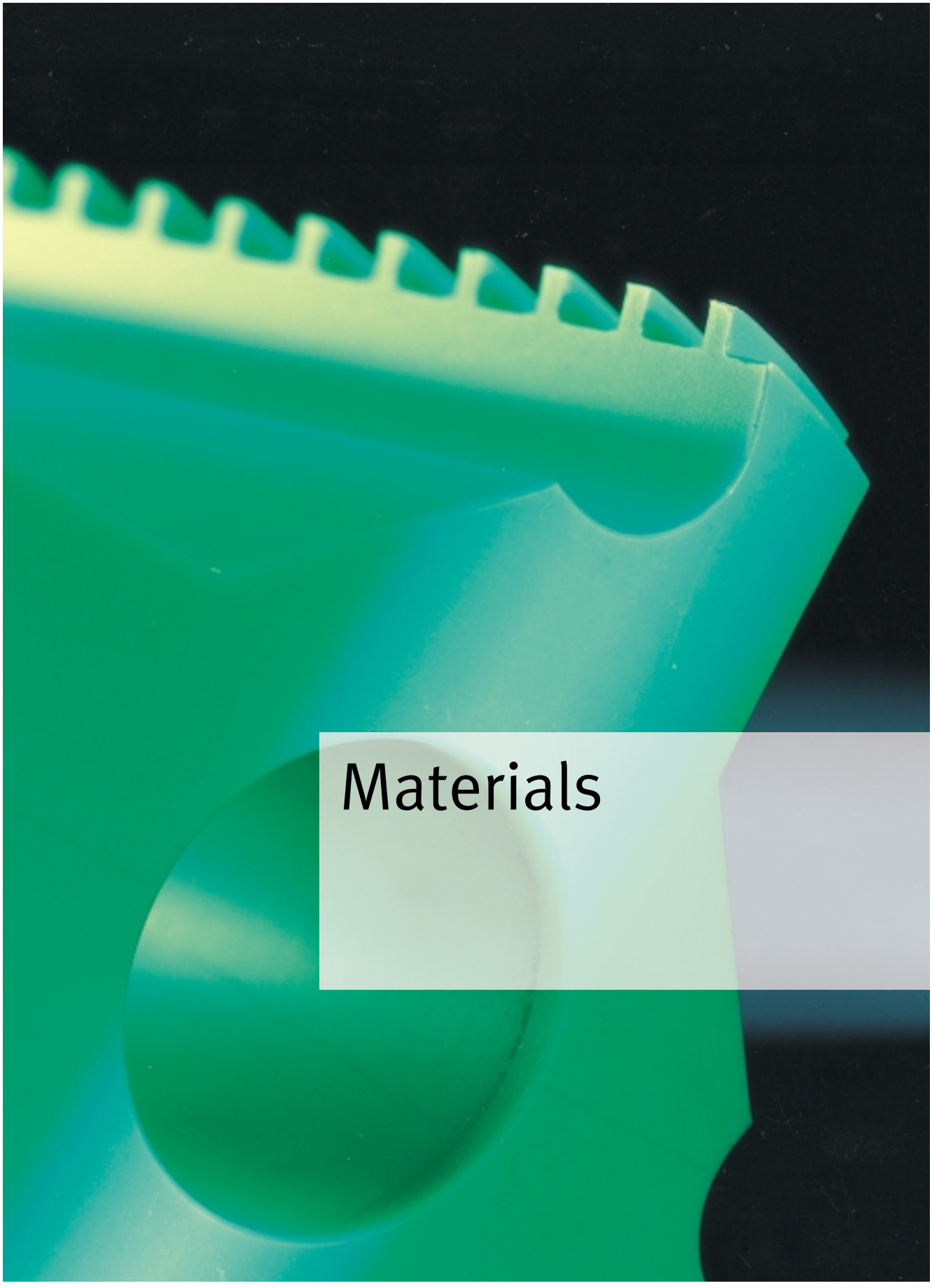

Materials

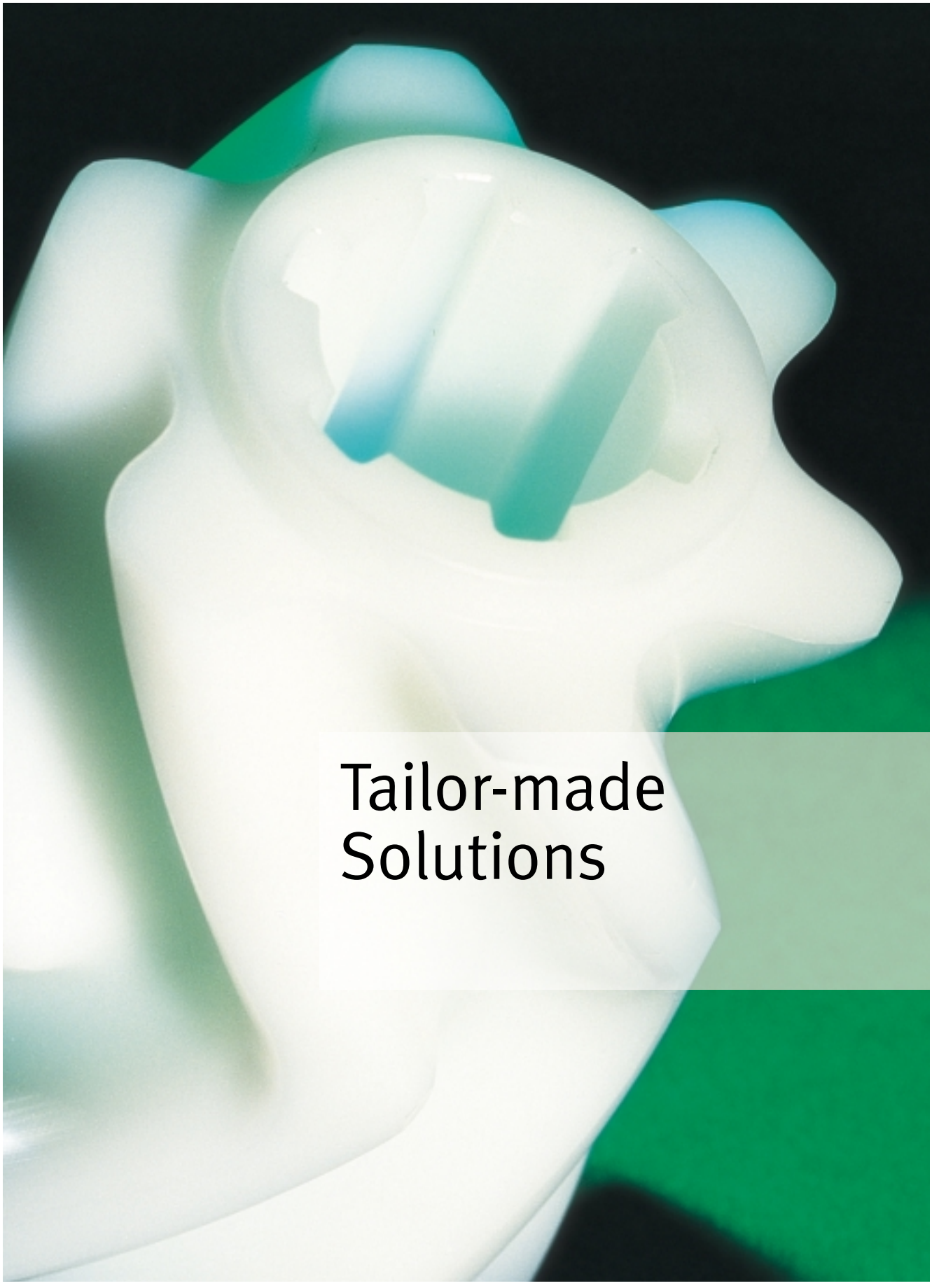

Tailor-made Solutions

Standard Product Range

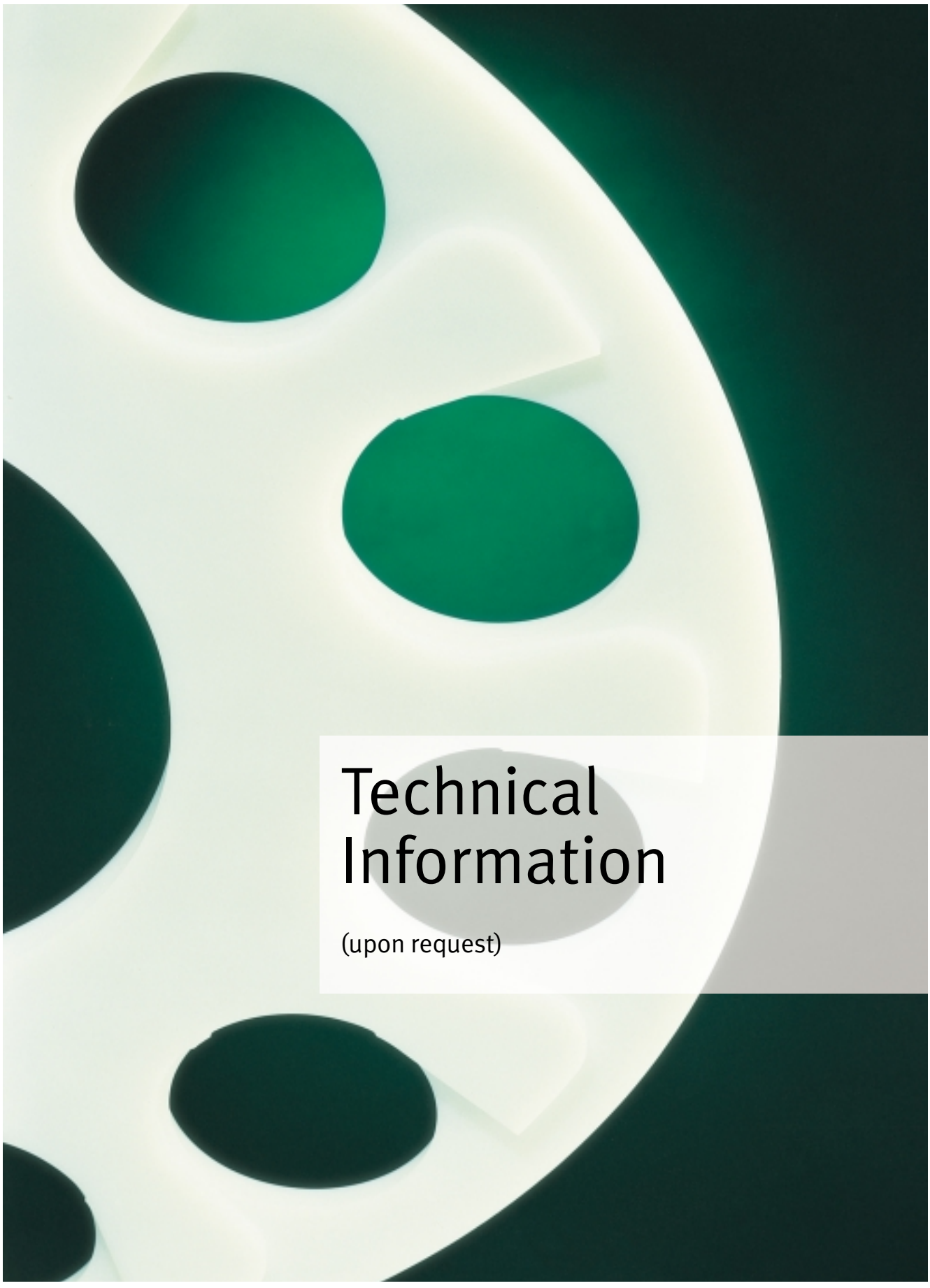

Technical Information

(upon request)

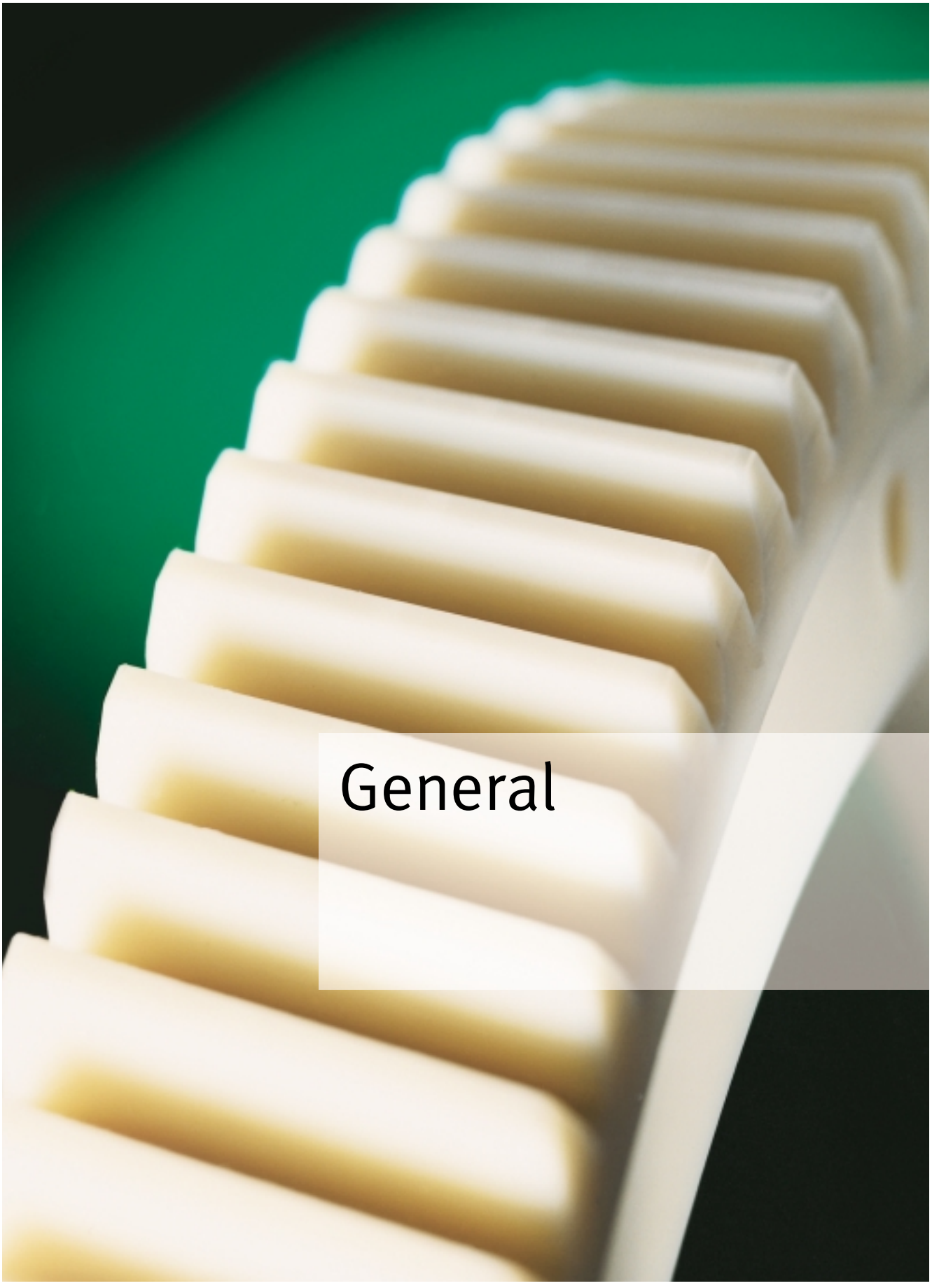

General

Up-to-date Information

on our website

www.murtfeldt.de

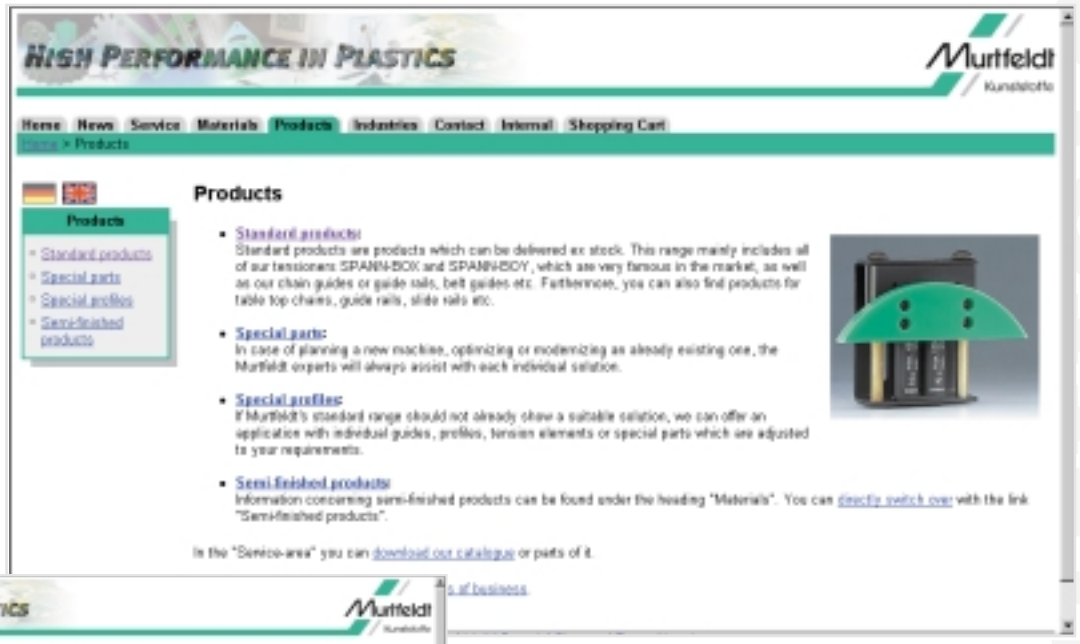

for example:

- interactive product selection
- trade fair diary
- you'll find your personal Murtfeldt contact both in-house and in the field by entering your country
- DXF download of our standard product range

www.murtfeldt.de

Contents

General

Internet page **2**
Contents **3-7**
Company Profile **8-9**

Materials

Introduction **13**
Materials Selection Chart **14**
Characteristic Values of Technical Materials ..... **15 – 16**
Sizes of Sheets and Round Bars ..... **17 – 20**

Technical Materials

Introduction **23**
Material "S"8000® ..... **24 – 26**
Original Material "S"® green/natural/ black antistatic ..... **27 – 30**
Material "S" 1000® green/black antistatic ..... **31 – 33**
Murlubric® ..... **34 – 37**
Murylon® **38**
Murylon® B natural ..... **39 – 46**
Murylon® A natural ..... **41 – 46**
Murylon® A black+ GF ..... **42 – 46**
Murylon® 6 cast natural ..... **44 – 46**
Murylon® SC ..... **47 – 49**
Murdopol® ..... **50 – 53**
Murytal® C natural/black ..... **54 – 56**
Murytal® H natural ..... **54 – 56**

High-Performance Materials

Introduction **59**
Murylat® ..... **60 – 62**
Murylat® SP ..... **60 – 62**
Murylon® HT ..... **63 – 65**
Murinyl® ..... **66 – 68**
Murflor® ..... **69 – 72**
Murflor®+ carbon ..... **69 – 72**
Murflor®+ bronze ..... **69 – 72**
Murdotec® SP ..... **73 – 75**
Murpec® ..... **76 – 78**
Murpec® SP ..... **76 – 78**

Tailor-Made Solutions

Introduction, First Contact **80**
Offer, Order Confirmation, Development **81**
Manufacture, Machining ..... **82 – 83**
Quality Assurance, Industry-Specific Packaging, Despatch **84**
Environment **85**

Standard Product Range

Introduction **89**

Chain Guides / Belt Guides

Introduction **90**
Chain Guides for Roller Chains to DIN8187 ..... **91**
Summary – Chain Guides **92**

Type T **94**
Type CT **95**

Type Double-T **96**
Type Double-CT **97**

Type TU **98**
Type CTU **99**

Type TS **100**
Type CTS **101**

Type U **102**
Type CU **103**

Type K **104**
Type CK **105**

Type CKG **106**
Type CKG 15 V **107**
Type CKG 14 H **108**

Type ETA **109**

Chain Guides available for Roller Chains to DIN8188 on request.

Chain Guides for Round Link Chains to DIN766 / 764 ..... **111**
Summary – Chain Guides **113**

Type R **114**
Type CRU **115**

Type CRG **116**
Type CRO **117**

Belt Guides for Round Belts, V-Belts to DIN2215, Flat Belts and Flat-V-Belts **119**
Summary – Belt Guides **121**

Type RR **122**
Type RRC **123**

Type KR **124**
Type KRC **125**

Standard Product Range

Type FR **126**
Type FRC **127**
Type FK **128**
Type FKC **129**

Steel C-Profiles and Fixing Bolts **131**
Summary – Steel C-Profiles to DIN59413 ..... **132**
Introduction **133**
Selection Chart **135**
How to Design Guides made from Plastics **136**
The Coefficient of Linear Expansion and Its Rôle in Design for Plastics **137**
Fixing Methods ..... **138 – 140**
T-Head Bolts **141**

Special Guides/Profiles ..... **143 – 144**
Selection of Special Profiles **145**

Products for Flat-Top Chains **147**
Introduction **149**
Slide Rails Type CF **150**
Tapes and Profiles for Table Top Chains ..... **151 – 154**
Guide Rails **155**
Clip-on Profiles ..... **156 – 157**
Guide Rails as Slide-in and Snap-on Profiles ..... **158 – 159**

Cam Guides for Flat-Top Chains **161**
Introduction **162**
Standard Cam Guides **163**
Standard Cam Guides with TAB-Design **164**

Chain Sprockets / Return Rollers for Flat-Top Chains **165**
Chain Sprockets **167**
Return Rollers **168**

Guide Rail Accessories **169**
Rail Support **171**
Clamp-on Parts and Fixing Sets **172**

Automatic Chain and Belt Tensioners **173**
Introduction **175**
The History of the SPANN-BOX® ..... **176 – 177**
Selecting the Right Chain Tensioner **178**
Selection Chart **179**
How Our Tensioning System Works **180**
Tension Data and Spring Travel **180**
Visual Indicator **181**
Installation Systems ..... **182 – 183**

Standard Product Range

Chain Tensioners for Roller Chains to DIN8187 ..... **185**

Chain Tensioners with Arc Segment Profile **187**
MINI-TENSIONER ..... **188 – 189**
SPANN-BOY® ..... **190 – 191**
SPANN-BOY® TS ..... **192 – 193**
SPANN-BOX® with Arc Segment Profile Size 30 ..... **194 – 195**
SPANN-BOX® with Arc Segment Profile Sizes 1 and 2 ..... **196 – 198**

Chain Tensioners with Semicircular Profile **199**
SPANN-BOX® Size 0 ..... **200**
SPANN-BOX® Sizes 1 and 2 ..... **201 –202**

Chain Tensioners with 180° Return Profile **203**
SPANN-BOX® Sizes 1 and 2 ..... **204 – 205**

Chain Tensioners with Block Profile **206**
SPANN-BOX® Size 2 ..... **206**

Chain Tensioners with Chain Sprocket **207**
SPANN-BOY® ..... **208 – 209**
SPANN-BOY® TS ..... **210 – 211**
SPANN-BOX® Type K-L, Type K-S Size 1 ..... **212 – 214**

SPANN-BOX® available for Roller Chains to DIN8188 on request

Belt Tensioners for Round Belts, V-Belts to DIN2215 and Flat Belts **215**
Automatic Belt Tensioners **216**
SPANN-BOY® **217**
SPANN-BOY® TS **218**
SPANN-BOX® Size 0 ..... **219**
SPANN-BOX® Size 1 ..... **220**
Type SR-L, Type SR-S ..... **221 – 222**

Chain and Belt Controllers **223**
Introduction: Mechanical Limit Switch **225**
SPANN-BOY® TS **226**
SPANN-BOX® Sizes 1 and 2 ..... **227**
Inductive Proximity Switch for SPANN-BOX® Sizes 1 and 2 ..... **228**

Fixing Methods **229**
Introduction: Installation System SMART MATE® **231**
Set SMART MATE® for SPANN-BOY® TS **232**
Set SMART MATE® for SPANN-BOX® Size 0 ..... **233**
Set SMART MATE® for SPANN-BOX® Size 30 ..... **234**
Set SMART MATE® for SPANN-BOX® Size 1 ..... **235**
Fixing Brackets SPANN-BOX® Size 1 / 2 ..... **236**

Standard Product Range

Special Orders **237**
Tandem Tensioner with Slide Profile **239**
SPANN-BOY® Twin Combination **239**

Chain Racks **241**
Introduction **243**
Installation and Calculation ..... **244 – 251**
Scope of Supply **252**

Manual and Automatic Lubrication Systems **253**
Introduction **255**
Product Range ..... **256 – 258**
Assembly Drawings **259– 262**

Technical Information on Request or on www. murtfeldt.de/service

Please make generous use of our Request Form to find out more about these subjects: **265**

Chemical Resistances
Bonding/Welding
Machining
Installation of Chain/Belt Tensioners

Tolerances for Machining Plastics

Individual Worm Conveyors
Chain Racks
Guiding Rollers
Rope Pulleys
Chain Guides
Spur Gears
Calculating Radial Bearings
Designing with Steel C-Profiles
Chain and Belt Tensioners

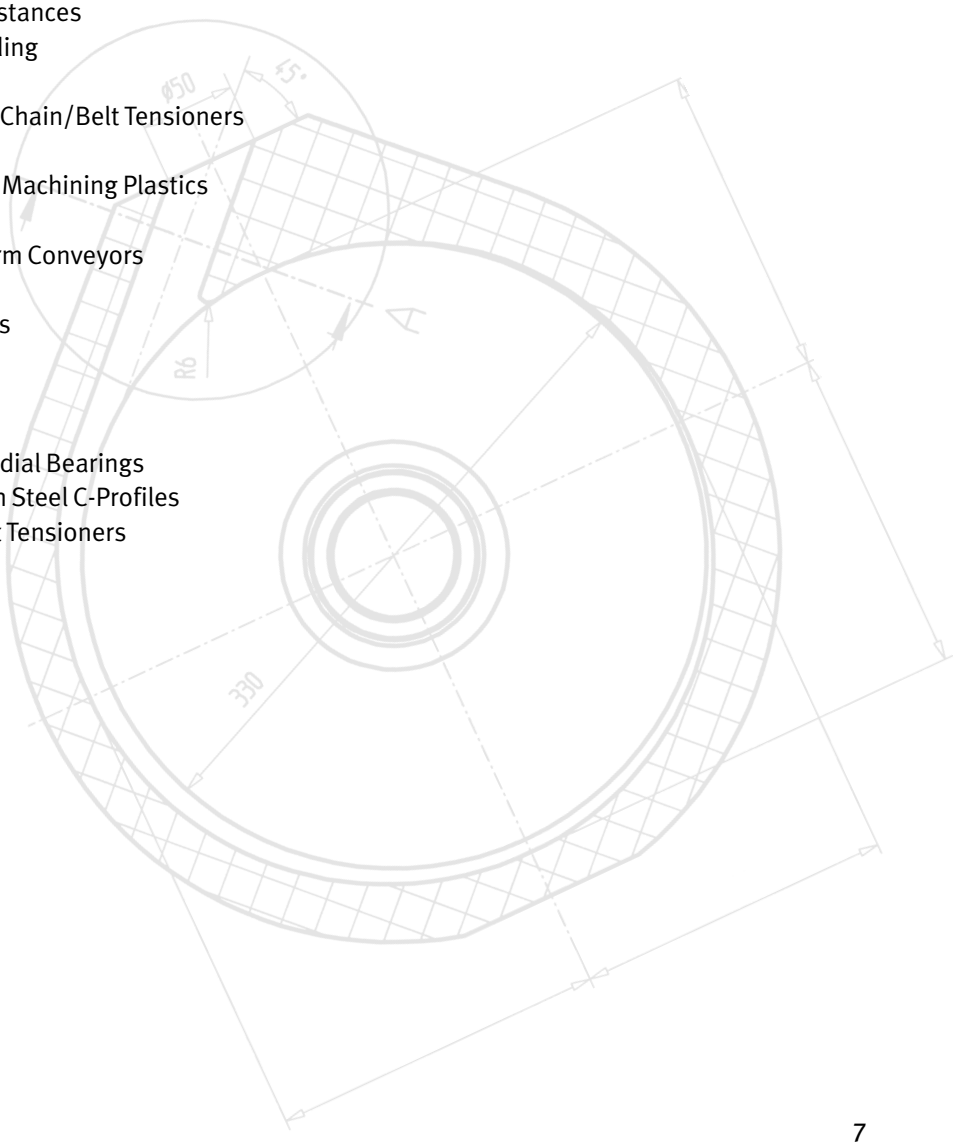

What you should know about us

Over 40 years ago, Murtfeldt started manufacturing specialized thermoplastic products for engineering and construction applications. Today we are one of that industry's leaders. Our success to date rests upon our mission to meet our clients' needs in every detail – and that's how we intend to keep it.

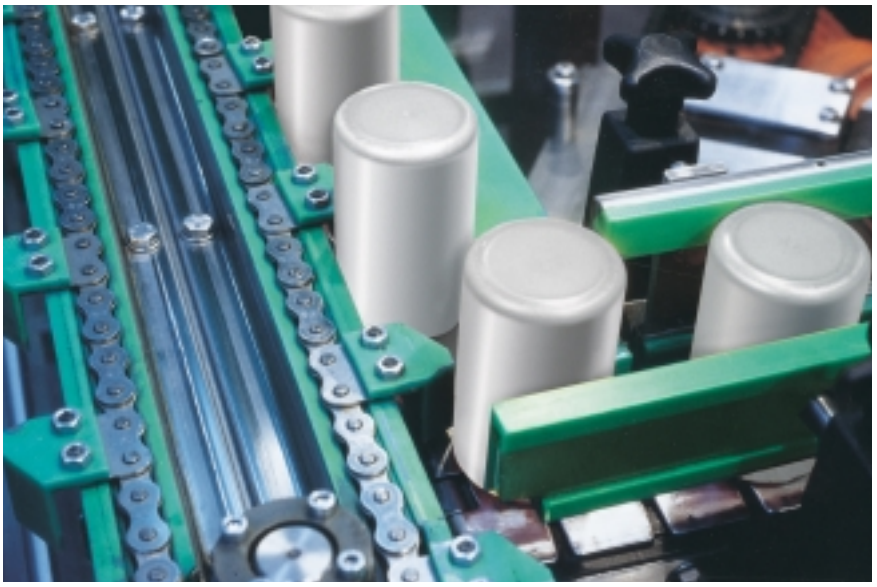

For us, responsibility for the environment is an important factor in any forward-looking production process. Our environmental protection certificate, awarded in 1997, is an integral part of our DIN EN ISO 9001 quality assurance certification.

We employ more than 190 skilled staff at our modern works. Experienced engineers – specialists in design – are available to assist you. An extensive field network of representatives offers local support anytime, free of charge.

Intensive in-house research and development as well as cooperating with outside scientific institutions enable us continuously to improve our materials quality. Our clients also benefit from our flexible manufacturing, firm delivery dates and exemplary documentation of all products and processes.

Murtfeldt Kunststoffe –
Your First Address

CERTIFIED
DIN EN ISO 9001
QUALITY SYSTEM
Reg. No. 2850-01

EMAS
VERIFIED
ENVIRONMENTAL MANGEMENT
D-118-00011

This site is subject to an environmental management scheme. Its environmental performance is reported to the public in accordance with the EU Environmental Management and Audit Scheme. (Reg. No. DE-S-118-00011)

Our Service Package For You

Murtfeldt Info-Hotline: +49-2 31- 20 60 9-0

- **s**upply of standard parts within 24 hours if required
- **r**eliable contacts at home and abroad
- **a**n extensive network of field representatives and agents worldwide
- **s**tands at many national and international trade fairs
- **o**rder status check available anytime
- **i**n-depth know-how covering a wide range of industries
- **d**esign and application consulting
- **p**roject management
- **a**ssistance in materials selection
- **i**n-house materials analysis
- **m**ultiple shift operation
- **f**ast responses and replies

Quality
Speed
Reliability

Murtfeldt Kunststoffe GmbH & Co. KG
Heßlingsweg 14 – 16
D-44309 Dortmund-Brackel
GERMANY
P.O. Box 12 01 61
D-44291 Dortmund
DEUTSCHLAND
Phone: +49-2 31-20 60 9-0
Fax: +49-2 31-25 10 21
Internet: www.murtfeldt.de
E-Mail: info@murtfeldt.de

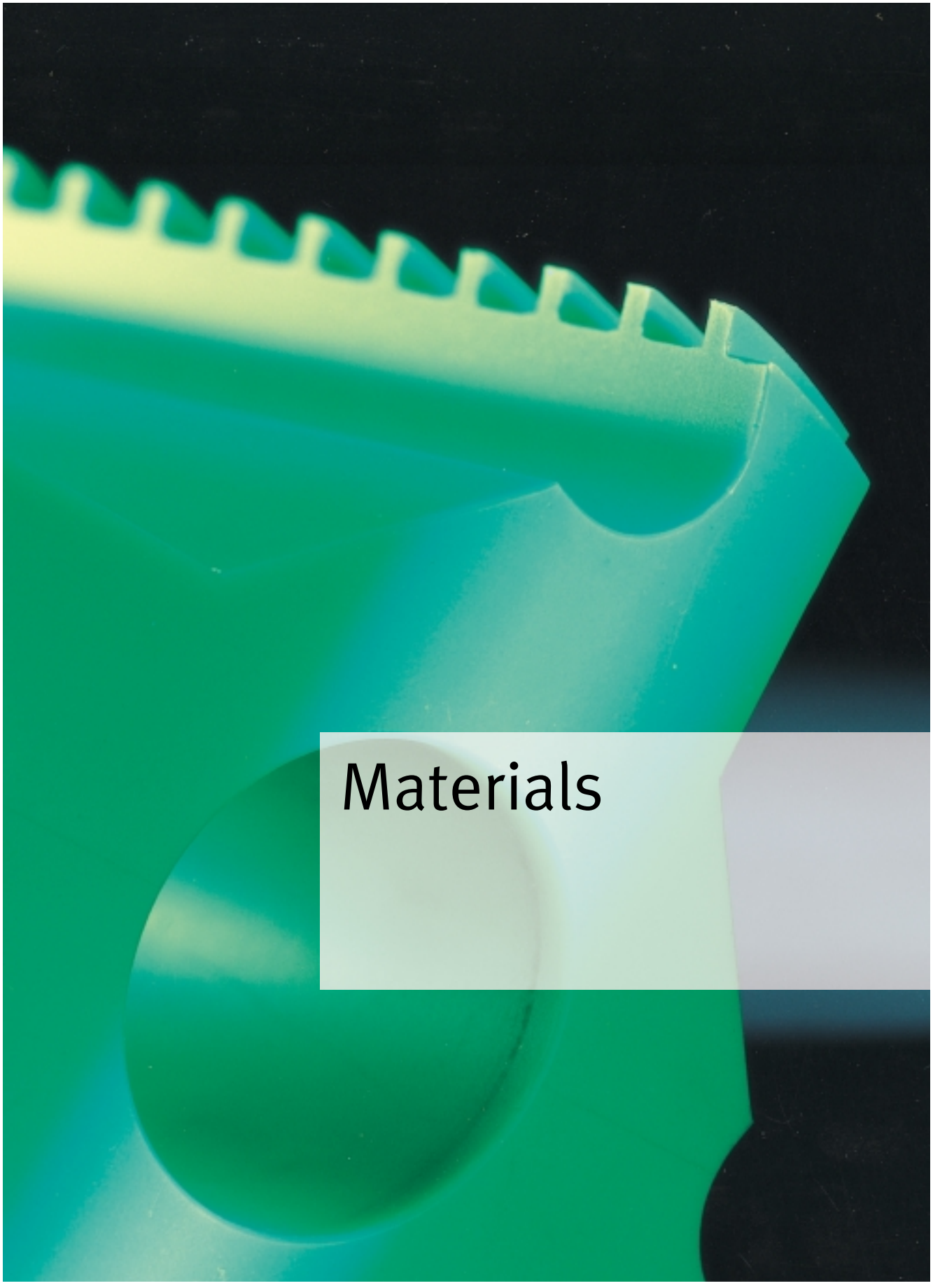

Materials

Large Stocks – Fast Deliveries

Minimum project duration and timely order processing are among the prerequisites for meeting the needs of the market.

Our generous storage capacities ensure that our wide range of materials is always available ex stock.

Materials Selection Chart

Technical Materials & High-Performance Materials

	Material "S"8000®	**Original Material "S"®green/ natural**	**Original Material "S"® black antistatic**	**Material "S"1000® green**	**Material "S"1000® black antistatic**	**Muralen®**	**Murlubric®**
Pages:	24–26	27–30	27–30	31–33	31–33	–	34–37
Colour	anthracite	green/white	black	green	black	white	black
Approved for contact with food [3]	o	++	++	o	o	++	o
Abrasion resistance	++	++	++	+	+	±	++
Slide properties	++	++	++	++	++	+	++
Insulating	++	++	o	++	o	++	+
Antistatic	o	o	++	o	++	o	o
Suitable for use in moisture	++	++	++	++	++	++	±
UV resistance (UVA, UVB)	++	±	+	±	+	±	+
Mechanical stress resistance	+	+	+	±	±	±	+
Temperature tolerance range (°C)	–200/+80	–200/+80	–200/+80	–150/+80	–150l+80	–100l+80	–40/+100
pH limits for pure solutions/compounds [1]	1–14	1–14	1–14	1–14	1–14	1–14	4–12

	Murylon® B natural	**Murylon® A+GF**	**Murylon® 6G natural**	**Murylon® SC**	**Murdopol®**	**Murytal® C**	**Murylat®**
Pages:	38–46	41– 46	44–46	47–49	50–53	54–56	60–62
Colour	white	black	beige	beige	beige	white	white
Approved for contact with food [3]	++	o	±	o	o	++	++
Abrasion resistance	+	±	+	+	+	±	+
Slide properties	+	±	+	+	+	±	+
Insulating	+	+	+	+	+	++	++
Antistatic	o	o	o	o	o	o	o
Suitable for use in moisture	±	±	±	±	+	++	++
UV resistance (UVA, UVB)	+	+	+	+	+	–	+
Mechanical stress resistance	+	++	+	+	++	+	+
Temperature tolerance range (°C)	–40/+90	–20/+120	–30/+105	–40/+90	–50/+120	–50/+115	–20/+115
pH limits for pure solutions/compounds [1]	4–12	4–12	4–12	4–12	4–12	4–13	1–9

	Murylat® SP	**Murylon® HT**	**Murinyl®**	**Murflor®**	**Murdotec®SP**	**Murpec®**	**Murpec ®SP**
Pages:	60–62	63–65	66–68	69–72	73–75	76–78	76–78
Colour	light grey/white	reddish brown	white	white	dark blue	beige	black
Approved for contact with food [3]	++	o	++	++	o	++	o
Abrasion resistance [1/2]	++	+/++	+/±	±/±	+/++	±/±	++/++
Slide properties [1/2]	++	+/++	+/+	++/++	±/++	±/+	+/++
Insulating	++	+	++	++	++	++	o
Antistatic	o	o	o	o	o	o	++
Suitable for use in moisture	++	±	++	++	++	++	++
UV resistance (UVA, UVB)	+	+	++	++	++	++	++
Mechanical stress resistance	+	+	±	±	++	++	++
Temperature tolerance range (°C)	–20/+115	–40/+155	–50/+150	–200/+260	–20/+220	–60/+250	–30/+250
pH limits for acids and alkalis	1–9	4–12	1–14	1–14	1–14	1–14	1–14

1) = room temperature 2) = increased temperature + suitable/good ++ highly suitable/approved ± limited/moderate o none – not suitable

3) = Approval for use in contact with food:
The raw materials used in the manufacture of semi-finished products made from those of our materials marked ++ conform to at least one of the following FDA (Food & Drug Administration), BGVO (Consumer Goods Regulation), BGVV (German Federal Institute for Consumer Health Protection & Veterinary Medicine) guidelines as well as to the EU Guideline 90/128/EWG and its addenda. On request, an individual approval certificate for materials marked + is available at cost. Our application engineers will be pleased to give you more detailed information on any of our materials.

Technical Materials

Characteristic Values

			DIN	ISO/(IEC)	Units	Material "S" 8000®	Original Material "S"® green/natural	Original Material "S"® black antistatic	Material "S" 1000® green	Material "S" 1000® black antistatic	Muralen®	Murlubric®	Murlon® B natural	Murlon® A natural	Murlon® A black + GF (30%) [11]	Murlon® [6] cast natural	Murlon®SC [9]	Murdopol®	Murytal® C	Murytal® H
1	Colour of material		–	–	–	anthracite	green/white	black	green	black	white	black	white	beige	black	beige	beige	beige	white/black	white
2	Catalogue pg		–	–	–	26	27–28	27–28	29	29	–	30	31–32	31–32	31–33	31–33	34	35	36	36
3	Code		7728	–	–	PE-UHM	PE-UHM	PE-UHM	PE-UHM	PE-UHM	PE-HM	PA 6-G/ÖL	PA 6	PA 66	PA 66-GF	PA 6-G	PA6-G/12-G	PA 12-G	POM-C	POM-H
4	Density		53479	1183	kg/dm³	0.96	≥ 0.93	≥0.93	≥0.93	≥0.93	0.95	1.14	1.14	1.14	1.29	1.15	1.12	1.03	1.41	1.43
5	Moisture absorption																			
6	- after 24/96 hours in water of +23 °C		53495	62	%	< 0.1	< 0.1	< 0.1	< 0.1	< 0.1	< 0.1	0.6/1.05	1.28/2.5	0.6/1.07	0.39/0.74	0.65/1.22	–	–	0.24/0.45	0.21/0.43
7	- when saturated in standard atmosphere of +23 °C/50 % rel. humidity		–	–	%	< 0.1	< 0.1	< 0.1	< 0.1	< 0.1	< 0.1	1.8	2.6	2.4	1.7	2.2	2.2	0.9	0.2	0.2
8	- when saturated in water		–	–	%	< 0.1	< 0.1	< 0.1	< 0.1	< 0.1	< 0.1	5.5–6.5	9	8	5.5	6.5	7	1.4	0.85	0.85
9	**Mechanical Characteristics [6]**																			
10	Yield stress/breaking stress	+	53455	527	N/mm²	21/–	≥ 17/–	≥ 17/–	≥ 15/–	≥ 15/–	20/–	70/–	76/–	90/–	–/100	85/–	80/–	60/–	68/–	78/–
		++										40/–	45/–	55/–	–/75	55/–	55	50		
11	Elongation at break (elongation at tear)	+	53455	527	%	360	≥ 300	≥ 300	≥ 200	≥ 150	>600	35–40	> 50	> 40	5	25	55	55	35	35
		++											> 100	> 100	12	> 50	120	120		
12	Modulus of elasticity	+	53457	527	N/mm²	750	700	700	950	950	1100	3000	3250	3450	5900	3500	2500	2200	3100	3600
	(tensile test)	++										1700	1400	1650	3200	1700	1500	1800		
13	Compression test	+	53454	604	N/mm²	–	4.5/8/14	5/9/15	6/10.5/18	6/10.5/18	9/15/23	–	24/46/80	25/49/92	28/55/90	26/51/92	–	–	19/35/67	22/40/75
	- compressive strain at 1/2/5 % nominal compression																			
14	Creep-depending-on-time tensile test (stress leading	+	53444	899	N/mm²	–	–	–	–	–	–	–	18	20	26	22	–	–	13	15
	to an elongation of 1 % after 1000 hours at +23°C)	++											7	8	18	10				
15	Impact strength (Charpy)	+	53453	179	kJ/m²	k.B.	k.B.	k.B.	k.B.	k.B.	k.B.	k.B.	k.B.	k.B.	≥ 50	k.B.	k.B.	k.B.	≥ 150	≥ 200
16	Notched bar impact strength (Charpy)	+	53453	179	kJ/m²	≥ 170	≥ 170	≥ 170	≥ 80	≥ 80	≥ 25	5–6	5.5	4.5	6	3.5	10–12	4–20	7	10
17	Ball impression hardness	+	53456	2039–1	N/mm²	43	38	40	38	38	45	140	150	160	165	165	132	98	140	160
18	Shore hardness D	+	53505	–	°	65	66	64	61–63	61–63	67	75	76	81	82-83	77	77	76	81	83
19	Sliding friction coefficient (dry) [10]	+	–	–	–	0.08–0.12	0.1–0.2	0.1–0.2	0.1–0.2	0.1–0.2	0.25	0.18	0.35	0.30	0.35	0.30	–	–	0.30	0.34
20	Sliding abrasion [10]	+	–	–	µm/km	0.036	0.045	–	–	–	1.0	0.05	0.23	0.10	0.28	0.12	–	0.80	8.9	–
21	**Thermal Characteristics [1]**																			
22	Melting temperature		–	–	°C	130–135	130–135	130–135	130-135	130-135	130-135	220	220	255	255	220	195–200	181	165	175
23	Glass transition temperature [2]		–	–	°C	–120	–120	–120	–120	–120	–120	50	50	60	60	50	–	–	–50	–50
24	Thermal conductivity at +23 °C		52612	–	W/(K x m)	0.4	0.4	0.4	0.4	0.4	0.4	0.23	0.28	0.28	0.30	0.29	–	0.23	0.31	0.31
25	Linear thermal expansion coefficient α:																			
26	- Average value between +23 and 60° C		–	–	m/(m x K)	17×10^{-5}	20×10^{-5}	20×10^{-5}	20×10^{-5}	20×10^{-5}	20×10^{-5}	8×10^{-5}	9.0×10^{-5}	8.0×10^{-5}	5×10^{-5}	8×10^{-5}	9×10^{-5}	$10\text{-}15 \times 10^{-5}$	11.0×10^{-5}	9.5×10^{-5}
27	- Average value between +23 and 100° C		–	–	m/(m x K)	–	–	–	–	–	–	9×10^{-5}	10.5×10^{-5}	9.5×10^{-5}	6×10^{-5}	9×10^{-5}	10×10^{-5}	$10\text{-}18 \times 10^{-5}$	12.5×10^{-5}	11.0×10^{-5}
28	Upper limit of operating temperature (air):																			
29	- Short-time [3]		–	–	°C	90	90	90	90	90	90	120	160	180	240	170	150	150	140	150
30	- Continuous – 5000 hours [4]		–	–	°C	80	80	80	80	80	80	100	100	100	120	105	90	120	115	105
31	Lower limit of operating temperature [5]		–	–	°C	–200	–200	–200	–150	–150	–100	–40	–40	–30	–20	–30	–40	–50	–50	–50
32	Flammability to UL94 [8] – sample thickness 3/6 mm		–	–	–	HB	HB	HB	HB	HB	HB	HB/HB	HB/HB	HB/V-2	HB/HB	HB/HB	–	–	HB/HB	HB/HB
33	**Electrical Characteristics [6]**																			
34	Dielectric strength [7]	+	53481	(243)	kV/mm	≤ 45	≤ 45	–	–	–	≤ 45	22	25	27	30	25	50	50	20	20
		++										14	16	18	20	17	20	20		
35	Volume resistivity	+	53482	(93)	Ohm x cm	$> 10^{16}$	$> 10^{14}$	$\leq 10^{6}$	$> 10^{14}$	$\leq 10^{6}$	$> 10^{14}$	$> 10^{14}$	$> 10^{14}$	$> 10^{14}$	$> 10^{14}$	$> 10^{14}$	10^{15}	10^{15}	$> 10^{14}$	$> 10^{14}$
		++										$> 10^{12}$	$> 10^{12}$	$> 10^{12}$	$> 10^{12}$	$> 10^{13}$	10^{12}	10^{12}		
36	Surface resistance	+	53482	(93)	Ohm	$> 10^{13}$	$> 10^{13}$	$\leq 10^{9}$	$> 10^{13}$	$\leq 10^{9}$	$> 10^{13}$	$> 10^{13}$	$> 10^{13}$	$> 10^{13}$	$> 10^{13}$	$> 10^{13}$	10^{13}	10^{13}	$> 10^{13}$	$> 10^{13}$
		++										$> 10^{12}$	$> 10^{12}$	$> 10^{12}$	$> 10^{12}$	$> 10^{12}$	10^{12}	10^{12}		
37	Dielectric value: – at 100 Hz	+	53483	(250)	–	–	2.1	–	–	–	2.1	3.5	3.9	3.8	3.9	3.6	–	3.5	3.8	3.8
		++										6.5	7.4	7.4	6.9	6.6	–	(bei 50 Hz)		
38	– at 1 MHz	+	53483	(250)	–	–	3.0	–	–	–	3.0	3.1	3.3	3.3	3.6	3.2	–	–	3.8	3.8
		++										3.6	3.8	3.8	3.9	3.7	–			
39	Dielectric loss factor tan δ: – at 100 Hz	+	53483	(250)	–	–	0.00039	–	–	–	0.00039	0.015	0.019	0.013	0.012	0.012	–	0.038	0.003	0.003
		++										0.15	0.13	0.13	0.19	0.14	–	(bei 50 Hz)		
39	– at 1 MHz	+	53483	(250)	–	–	–	–	–	–	–	0.016	0.021	0.02	0.014	0.016	–	–	0.008	0.008
		++										0.05	0.06	0.06	0.04	0.05	–			
40	**Physiological Characteristics**																			
41	Approved for use in contact with food [12]		–	–	–	yes	yes	yes	no	no	yes	no	yes	yes	no	on request	no	no	yes	yes

The standard values shown in this table are intended to help you compare materials at a glance. They are short-time values only and should not be used for designing components subject to long-term stresses as they may be affected by processing conditions, modifications, environmental influences etc. They are empirical and made available only for consultation without obligation. For further details, please consult our Technical Department.

Legend:
+: values for dry materials
++: values for materials stored to saturation at standard atmosphere of 23 °C / 50 % rel. humidity

1) The values quoted for these properties are largely extracted from data sheets supplied by raw materials manufacturers and from other publications.

2) These values are based on information supplied by raw materials manufacturers and on technical literature.

3) Thermal stress for some hours during which time no, or only low mechanical stresses occur.

4) Thermal stress for 5000 hours. After this time, tensile strength has dropped to 50% of the initial value. The upper operating temperature limits quoted here therefore reflect the reduction in quality levels caused by this thermally oxidizing degradation.

5) As temperature decreases, so does impact strength. The values quoted here are based on unfavourable impact stresses and so should not be considered absolute practical limits.

6) The mechanical and electrical characteristics quoted are valid for a standard atmosphere of 23°C. Given that water absorption for Murytal® is very low, the values for the mechanical and electrical characteristics of both dry (+) samples and samples exposed to air humidity (++) may be considered almost the same.

7) The dielectric strength of black extruded material may be up to 50% lower than that of natural colour material. Any micro-porosity in the centre of Murytal® semi-finished products may also lead to a considerable reduction in dielectric strength.

8) The fire classifications quoted are based on data sheets supplied by raw materials manufacturers and cannot in any way be inferred to reflect the actual behaviour in fire of the materials in case of fire.

9) Murylon®SC is a newly developed material not all of whose characteristic values have yet been established. In case of queries, please contact our Technical Department.

10) Actual sliding friction coefficients and sliding abrasion may differ from the values quoted depending on application conditions.

11) Murylon®A black + GF is a fibreglass enforced material with anisotropic behaviour (characteristics are differentially parallel and vertical to direction of extrusion).

12) **Approval for use in contact with food:**
The raw materials used in the manufacture of semi-finished products made from those of our materials marked ++ conform to at least one of the following FDA (Food & Drug Administration), BGVO (Consumer Goods Regulation), BGVV (German Federal Institute for Consumer Health Protection & Veterinary Medicine) guidelines as well as to the EU Guideline 90/128/EWG and its addenda. On request, an individual approval certificate for materials marked + is available at cost. Our application engineers will be pleased to give you more detailed information on any of our materials.

Chemical Characteristics:
Fast, comprehensive information about chemical properties available on request.

RF = rel. humidity
k.B. : no break

High-Performance Materials

Characteristic Values

			DIN	ISO/(IEC)	Units	Murylat®	Murylat® SP	Murylon® HT	Murinyl®	Murflor®	Murflor® + carbon (25%)	Murflor® + bronze (60%)	Murdotec® SP	Murpec®	Murpec® SP
1	Colour of material		–	–	–	white	light grey	reddish brown	white	white	black	bronze	dark blue	beige	black
2	Catalogue pg		–	–	–	38	38	39	40	41	41	41	42	43	43
3	Code		7728	–	–	PETP	PETP-SP	PA 4.6	PVDF	PTFE	PTFE-C	PTFE-CuSn	PPS-SP	PEEK	PEEK-SP
4	Density		53479	1183	kg/dm³	1.39	1.44	1.18	1.79	2.18	2.12	3.74	1.43	1.31	1.45
5	Moisture absorption														
6	- after 24/96 hours in water of +23 °C		53495	62	%	0.07/0.16	0.06/0.13	1.3/2.6	0.01/0.03	–	–	–	0.01/0.03	0.06/0.12	0.05/0.11
7	- when saturated in standard atmosphere of +23 °C/50 % rel. humidity		–	–	%	0.25	0.23	2.8	0.05	–	–	–	0.03	0.2	0.14
8	- when saturated in water		–	–	%	0.5	0.47	9.5	0.05	–	–	–	0.09	0.45	0.3
9	**Mechanical Characteristics** [5]														
10	Yield stress/breaking stress	+	53455	527	N/mm²	90/–	–/76	100/–	50/–	18/–	15/–	14/–	–/75	110/–	–/75
		++				90/–	–/76	55/–							
11	Elongation at break (elongation at tear)	+	53455	527	%	15	7	25	>20	350	180	140	5	20	5
		++				15	7	>100							
12	Modulus of elasticity	+	53457	527	N/mm²	3700	3450	3300	2300	750	–	–	3700	4400	5900
	(tensile test)	++				3700	3450	1300							
13	Compression test	+	53454	604	N/mm²	26/51/103	24/47/95	23/45/94	17/32/–	4.3/–/–	11/–/–	10.3/–/–	28/55/–	29/57/–	34/67/–
	- compressive strain at 1/2/5 % nominal compression														
14	Creep-depending-on-time tensile test (stress leading	+	53444	899	N/mm²	26	23	22	10	–	–	–	36	32	55
	to an elongation of 1% after 1000 hours at +23°C)	++				26	23	7.5							
15	Impact strength (Charpy)	+	53453	179	kJ/m²	≥ 50	≥ 30	k.B.	k.B.	k.B.	–	–	25	k.B.	25
16	Notched bar impact strength (Charpy)	+	53456	179	kJ/m²	2	2.5	8	10	16	8	11	3.5	3.5	2.5
17	Ball impression hardness	+	53455	2039-1	N/mm²	170	160	165	110	22	37	37	180	230	215
18	Shore hardness D	+	–	–	°	81	81	80	78	58	67	68	81	87	87
19	Sliding friction coefficient (dry)[6]	+	–	–	–	0.30	0.18	0.34	0.35	0.08	0.12	0.14	0.20	0.20	0.15
20	Sliding abrasion[6]	+	–	–	µm/km	–	0.05	–	21	21	1.0	0.5	0.1	0.30	0.05
21	**Thermal Characteristics** [7]														
22	Melting temperature		–	–	°C	255	255	295	175	321	330	330	280	340	340
23	Glass transition temperature		–	–	°C	70	70	80	–	127	127	127	100	143	143
24	Thermal conductivity at +23 °C		52612	–	W/(K x m)	0.29	0.29	0.30	0.19	0.23	0.7	0.7	0.30	0.25	0.24
25	Linear thermal expansion coefficient α:														
26	Average value between +23 and 60° C		–	–	m/(m x K)	8×10^{-5}	8.5×10^{-5}	9×10^{-5}	13.0×10^{-5}	12.2×10^{-5}	10.7×10^{-5}	9.7×10^{-5}	5×10^{-5}	5×10^{-5}	3×10^{-5}
27	Average value between +23 and 100° C		–	–	m/(m x K)	–	–	–	14.5×10^{-5}	19.5×10^{-5}	10.7×10^{-5}	9.7×10^{-5}	6×10^{-5}	5×10^{-5}	3×10^{-5}
28	Average value above 150° C		–	–	m/(m x K)	–	–	–	–	19.5×10^{-5}	10.7×10^{-5}	9.7×10^{-5}	8×10^{-5}	11×10^{-5}	6.5×10^{-5}
29	Upper limit of operating temperature (air):														
30	Short-time [1]		–	–	°C	160	160	200	160	300	300	300	260	310	310
31	Continuous – for 5000/20,000 hours [2]		–	–	°C	115/100	115/100	155/135	–/150	–/260	–/260	–/260	–/220	–/250	–/250
32	Lower limit of operating temperature [3]		–	–	°C	–20	–20	–40	–50	–200	–200	–200	–20	–60	–30
33	Flammability to UL94 [4] – sample thickness 1.5/3 mm		–	–	–	–	–	–	V-0 / V-0	V-0 / V-0	V-0 / V-0	V-0 / V-0	V-0 / V-0	V-0 / V-0	V-0 / V-0
34	– sample thickness 3/6 mm		–	–	–	HB / HB	HB / HB	HB / HB	–	–	–	–	–	–	–
35	**Electrical Characteristics** [5]														
36	Dielectric strength	+	53481	(243)	kV/mm	22	21	25	18	20	–	–	24	24	–
		++				22	21	15							
37	Volume resistivity	+	53482	(93)	Ohm x cm	$>10^{15}$	$>10^{15}$	$>10^{14}$	10^{15}	10^{18}	10^{3}	10^{8}	10^{15}	10^{16}	$<10^{7}$
		++				$>10^{15}$	$>10^{15}$	$>10^{12}$							
38	Surface resistance	+	53482	(93)	Ohm	$>10^{14}$	$>10^{14}$	$>10^{13}$	10^{16}	10^{17}	10^{3}	10^{8}	10^{15}	10^{16}	$<10^{7}$
		++				$>10^{14}$	$>10^{14}$	$>10^{12}$							
39	Dielectric value: – at 100 Hz	+	53483	(250)	–	3.4	3.4	3.8	7.4	2.0	–	–	3.3	3.2	–
		++				3.4	3.4	7.4							
40	– at 1 MHz	+	53483	(250)	–	3.2	3.2	3.4	6	2.1	–	–	3.3	3.2	–
		++				3.2	3.2	3.8							
41	Dielectric loss factor tan δ: – at 100 Hz	+	53483	(250)	–	0.001	0.001	0.009	0.025	<0.0003	–	–	0.003	0.001	–
		++				0.001	0.001	0.13							
42	– at 1 MHz	+	53483	(250)	–	0.014	0.014	0.019	0.165	<0.0001	–	–	0.003	0.002	–
		++				0.014	0.014	0.06							
43	**Physiological Characteristics**														
44	Approved for use in contact with food (EU directive/FDA)		–	–	–	yes	yes	no	yes	yes	no	no	no	yes	no

The standard values shown in this table are intended to help you compare materials at a glance. They are short-time values only and should not be used for designing components subject to long-term stresses as they may be affected by processing conditions, modifications, environmental influences etc. They are empirical and made available only for consultation without obligation. For further details, please consult our Technical Department.

Legend:
+: values for dry materials
++: values for materials stored to saturation at standard atmosphere of 23°C/50% rel. humidity

1) Thermal stress for some hours during which time no, or only low mechanical stresses occur.

2) Thermal stress for 5000/20,000 hours. After this time, tensile strength has dropped to 50% of the initial value. The upper operating temperature limits quoted here therefore reflect the reduction in quality levels caused by this thermally oxidizing degradation.

3) As temperature decreases, so does impact strength. The values quoted here are based on unfavourable impact stresses and so should not be considered absolute practical limits.

4) The fire classifications quoted are based on data sheets supplied by raw materials manufacturers and cannot in any way be inferred to reflect the actual behaviour in fire of the materials in case of fire.

5) The mechanical and electrical characteristics quoted are valid for a standard atmosphere of 23°C. Given that water absorption for Murylat® is very low, the values for the mechanical and electrical characteristics of both dry (+) samples and samples exposed to air humidity (++) may be considered almost the same.

6) Actual sliding friction coefficients and sliding abrasion may differ from the values quoted depending on application conditions.

7) The values quoted for these properties are largely extracted from data sheets supplied by raw materials manufacturers and from other publications.

8) **Approval for use in contact with food:**
The raw materials used in the manufacture of semi-finished products made from those of our materials marked ++ conform to at least one of the following FDA (Food & Drug Administration), BGVO (Consumer Goods Regulation), BGVV (German Federal Institute for Consumer Health Protection & Veterinary Medicine) guidelines as well as to the EU Guideline 90/128/EWG and its addenda. On request, an individual approval certificate for materials marked + is available at cost. Our application engineers will be pleased to give you more detailed information on any of our materials.

Chemical Characteristics:
Fast, comprehensive information about chemical properties available on request.

RF = rel. humidity
k.B. : no break

Characteristic Values

Murtfeldt Kunststoffe

Sheet Sizes

Material	Sheet dimensions (mm)				
	Thickness	Width	Length	Thickness tolerance	Availability
Material "S" 8000®	8–50	1000	2000	+0/+0.6	●
	60–130	1000	2000	+0/+0.6	○
Original Material "S"® green	2/3/4/5/6	1000	2000	+0/+0.8	●
Semi-finished to DIN16972 Plate Group 2	8–200	1000	2000	+0/+0.6	●
	2/4	1200	3000	+0/+0.8	○
	3/5/6	1200	3000	+0/+0.8	●
	8–60	1220	3000	+0/+0.6	●
	10–40	650	6000	+0/+0.6	●
	50	650	6000	+0/+0.6	○
Original Material "S"® natural	2/3/4/5/6	1000	2000	+0/+0.8	●
Semi-finished to DIN16972 Plate Group 2	8–100	1000	2000	+0/+0.6	●
	110–200	1000	2000	+0/+0.6	○
	2/3/4/5/6	1200	3000	+0/+0.8	○
	8	1220	3000	+0/+0.6	○
	10–20	1220	3000	+0/+0.6	●
	25–60	1220	3000	+0/+0.6	○
	10–50	650	6000	+0/+0.6	○
Original Material "S"® black antistatic	2/3/4/5/6	1000	2000	+0/+0.8	●
Semi-finished to DIN16972 Plate Group 2	8–200	1000	2000	+0/+0.6	●
	2/3/4	1200	3000	+0/+0.8	○
	5/6	1200	3000	+0/+0.8	●
	8–50	1220	3000	+0/+0.6	●
	55–60	1220	3000	+0/+0.6	○
	10–20	650	6000	+0/+0.6	●
	25–50	650	6000	+0/+0.6	○
Material "S" 1000® green	2/3/4	1000	2000	+0/+0.8	○
	5/6	1000	2000	+0/+0.8	●
	8–110	1000	2000	+0/+0.6	●
	120–160	1000	2000	+0/+0.6	○
	2/3/4/5/6	1200	3000	+0/+0.8	○
	8	1220	3000	+0/+0.6	○
	10–50	1220	3000	+0/+0.6	●
	55–60	1220	3000	+0/+0.6	○
	10–50	650	6000	+0/+0.6	○
Material "S" 1000® black antistatic	2/3/4/5	1000	2000	+0/+0.8	○
	6	1000	2000	+0/+0.8	●
	8–110	1000	2000	+0/+0.6	●
	120–160	1000	2000	+0/+0.6	○
	2/3/4/5/6	1200	3000	+0/+0.8	○
	8	1220	3000	+0/+0.6	○
	10–40	1220	3000	+0/+0.6	●
	50–60	1220	3000	+0/+0.6	○
	10–50	650	6000	+0/+0.6	○
Muralen® natural	2–8	1000	2000	to DIN16972	●
Semi-finished to DIN16972 Plate Group 3	10–60	1000	2000	+0/+0.6	●

Tolerances: Widths and lengths ≥ + 0mm or to DIN16986

● ex stock
○ easily available on request

Sheet Sizes

Material	Sheet dimensions (mm) Thickness	Width	Length	Thickness tolerance	Availability
Murlubric®	8–100	1000	2000	+0/+0.6	●
	110–200	1000	1000	≥+0mm	○
Murylon® B natural	3–60	1000	2000	to DIN16986	●
	70–100	610	2000	to DIN16986	●
Murylon® A natural	8–60	610	2000	to DIN16986	○
Murylon®A black+GF	10–100	625	2000	to DIN16986	○
Murylon® 6 cast natural	8–100	1000	2000	to DIN16986	●
Murylon® SC	10–100	1000	2000	to DIN16986	○
Murdopol®	10–100	1000	1000	to DIN16986	○
Murytal® C natural	3–8	1000	2000	to DIN16986	●
	10–60	1000	2000	to DIN16986	●
	70–100	610	2000	to DIN16986	●
Murytal® C black	5–8	1000	2000	to DIN16986	●
	10–60	1000	2000	to DIN16986	●
	70–100	610	2000	to DIN16986	●
Murytal® H natural	8–50	610	2000	to DIN16986	○
Murylat® natural	8–100	610	2000	to DIN16986	○
Murylat® SP	8–100	610	2000	to DIN16986	○
Murylon® HT	10–40	610	2000	to DIN16986	●
	50	500	2000	to DIN16986	●
Murinyl®	10–80	610	2000	to DIN16986	○
Murflor®	3–50	1000	1000	≥ +0mm	●
	10–20	500	2000	≥ +0mm	●
Murflor® carbon	10–40	1000	1000	≥ +0mm	○
Murflor® bronze	10–40	1000	1000	≥ +0mm	○
Murdotec® SP	8–50	625	2000	to DIN16986	○
Murpec®	5–25	500	1000	to DIN16986	○
	30–60	615	1000	to DIN16986	○
Murpec® SP	5–8	525	1000	to DIN16986	○
	10–50	625	2000	to DIN16986	○

Tolerances: Lengths ≥ + 0mm or to DIN16980

● ex stock
○ easily available on request

Special sizes (thickness x width x length), blanks, discs and different colours on request
Please contact us (see pg 265 for fax request form)

Round Bar Sizes

Material	Round bar format (mm)				
	Diameter	**Gradation**	**Length**	**Ø tolerance to DIN16980**	**Avail-ability**
Material "S" 8000®	10–25	5	1000	+0/+1	○
	25–40	5	1000	+0/+1	○
	40–80	10	1000	+0/+1	○
Original Material"S"® green	10–100	5	1000	+0/+1	●
Semi-finished to DIN16972 Plate Group 2	100–200	10	1000	+0/+1	●
Original Material "S"® natural	10–30	5	1000	+0/+1	●
Semi-finished to DIN16972 Plate Group 2	30–170	10	1000	+0/+1	●
	170–200	10	1000	+0/+1	○
Original Material "S"® black antistatic	10–100	5	1000	+0/+1	●
Semi-finished to DIN16972 Plate Group 2	100–200	10	1000	+0/+1	●
Material "S" 1000® green	10–25	5	1000	+0/+1	○
	25–40	5	1000	+0/+1	○
	40–150	10	1000	+0/+1	○
Material "S" 1000®	10–25	5	1000	+0/+1	○
black antistatic	25–40	5	1000	+0/+1	○
	40–150	10	1000	+0/+1	○
Muralen® natural	20–25	5	1000	to DIN16980	○
	30–60	5	1000	+0/+1	○
Murlubric®	10–100	5	1000	≥ +0mm	●
	100–200	10	1000	≥ +0mm	●
Murylon® B natural	5–40	#	1000	to DIN16980	●
	40–100	5	1000	to DIN16980	●
	100–200	10	1000	to DIN16980	●
Murylon® A natural	5–40	#	1000	to DIN16980	○
	40–100	5	1000	to DIN16980	○
	100–200	10	1000	to DIN16980	○
Murylon® A black+GF30	10–30	5	1000	to DIN16980	○
	30–200	10	1000	to DIN16980	○
Murylon® 6 cast natural	50–150	5	1000	to DIN16980	○
	150–200	10	1000	to DIN16980	○
Murylon® SC	50–200	10	610	to DIN16980	○
(Round bars with/without steel core)	80–210[1)]	10	610	to DIN16980	○
Murdopol®	50–200	10	500	to DIN16980	○
(Round bars with/without steel core)					

1) = diameter incl. steel core
Tolerances: Lengths ≥ + 0mm or to DIN16980

● ex stock
○ easily available on request

Round Bar Sizes

Material	Round bar format (mm)				
	Diameter	Graduation	Length	Ø tolerance to DIN16980	Avail-ability
Murytal® C natural	3–40	#	1000	to DIN16980	●
	40–100	5	1000	to DIN16980	●
	100–200	10	1000	to DIN16980	●
Murytal® C black	5–40	#	1000	to DIN16980	●
	40–100	5	1000	to DIN16980	●
	100–180	10	1000	to DIN16980	●
Murytal® H natural	5–40	#	1000	to DIN16980	○
	40–100	5	1000	to DIN16980	○
	100–200	10	1000	to DIN16980	○
Murylat® natural	10–210	#	1000	to DIN16980	○
Murylat® SP	10–150	#	1000	to DIN16980	○
Murylon® HT	10–30	5	1000	to DIN16980	○
	30–60	10	1000	to DIN16980	○
Murinyl®	10–200, 250	#	1000	to DIN16980	○
Murflor®	10–100	5	1000	≥ +0mm	●
	100–120	10	1000	≥ +0mm	●
Murflor® carbon	10–100	10	on request	≥ +0mm	○
Murflor® bronze	10–100	10	on request	≥ +0mm	○
Murdotec® SP	10–100	#	1000	to DIN 16980	○
Murpec®	4–12	2	1000	to DIN 16980	○
	16–22	2	1000	to DIN 16980	○
	25–200	#	1000	to DIN 16980	○
Murpec® SP	6–12	2	1000	to DIN 16980	○
	16–100	#	1000	to DIN 16980	○

Tolerances: Lengths ≥ + 0mm or to DIN16980
irregular graduation – please inquire

● ex stock
○ easily available on request

Other sizes (2000mm, 3000mm), blanks, discs and special colours on request.
Please contact us (see pg 265 for fax request form)

Irregular graduation, please state Ø required even if not shown here: It (or next size up) is available.

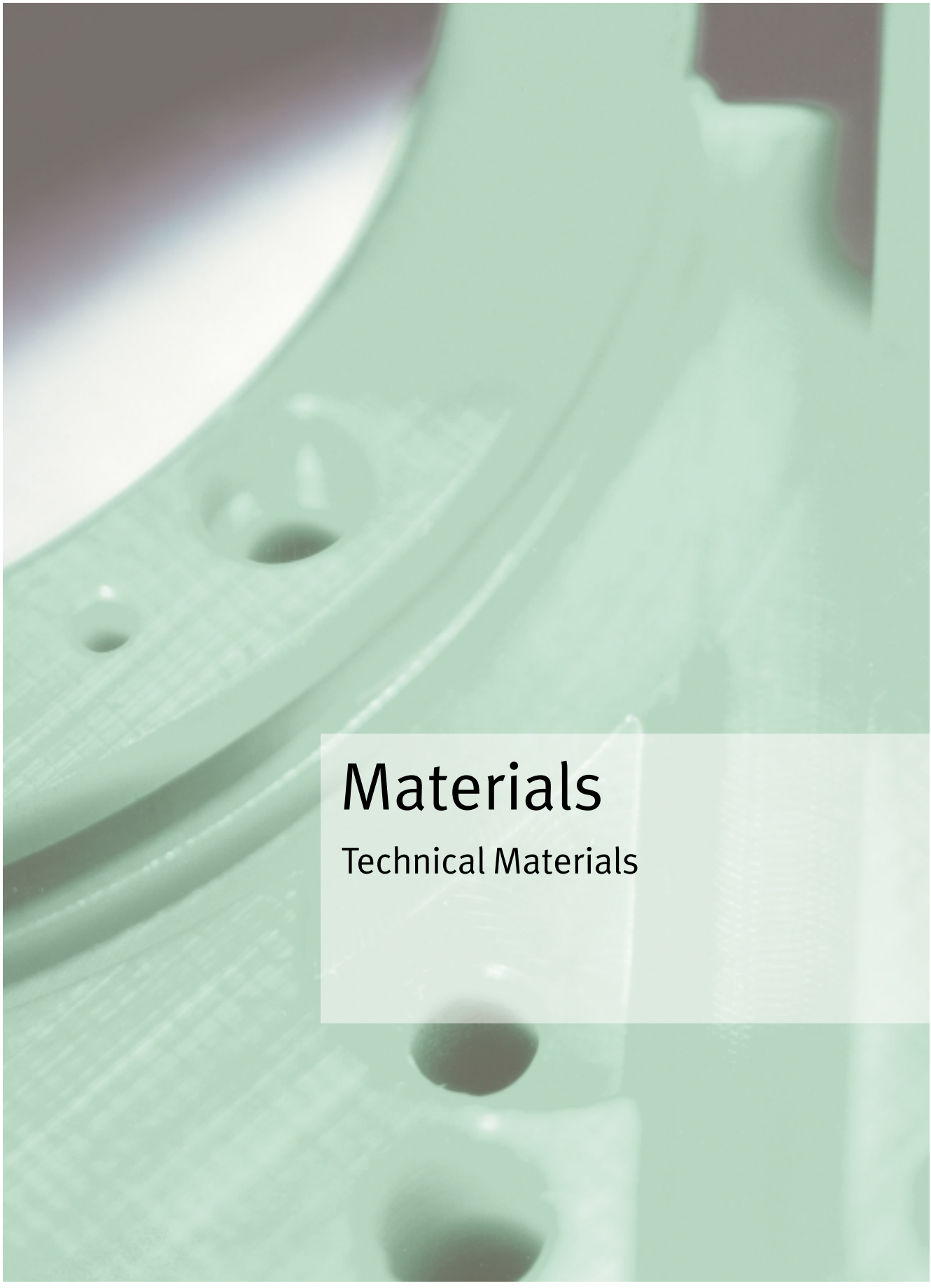

Materials

Technical Materials

ø12.5
30°
ø79.5
ø55+0.2
+0.1

Technical Materials

These days, no branch of the mechanical engineering industry can manage without hi-tech plastics any more. Their many advantages are obvious. Good slide properties, high wear resistance and enormous mechanical and chemical stress resistance have made them indispensible materials in design and construction.

Their extremely sophisticated production processes allow individual demands to be met with maximum precision, while their long life and low maintenance requirements lead to economical solutions in mechanical engineering.

In the last few years, we have developed a wide range of cutting-edge plastics specially adapted to solving a broad spectrum of the design challenges of tomorrow.

Material ”S” 8000®

anthracite

Characteristics at a glance

- excellent for precision parts
- self-lubricating
- extremely low sliding friction coefficient
- extremely high abrasion resistance
- long life
- good chemical resistance
- high UV resistance
- good impact and noise absorption
- low residual stress
- no moisture absorption
- electrically insulating

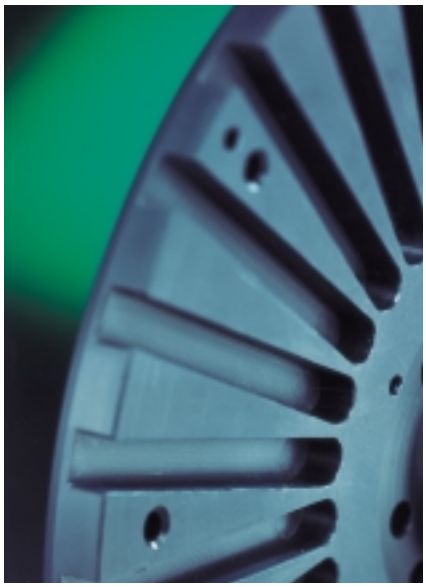

Material ”S” 8000® improves yet further on the proven qualities of Original Material ”S”®, enabling us to offer you highly specific solutions for a broad range of problems.

Even lower sliding friction coefficient
Material ”S” 8000® is self-lubricating. Its sliding friction coefficient is lower than that of Original Material ”S”®, making even lower driving forces possible.

Ideal for precision parts
Its low residual stress makes Material ”S” 8000® ideal for the production of extremely high-precision parts, thus broadening its range of applications, e.g. for slide rails, slide segments and slide bearings. Further qualities include high chemical resistance and good noise absorption.

Higher abrasion resistance
Its increased abrasion resistance ensures longer life compared to Material”S”®.

Contact with food
Material ”S” 8000® is approved for direct contact with food (EU directives and FDA) and physiologically safe.

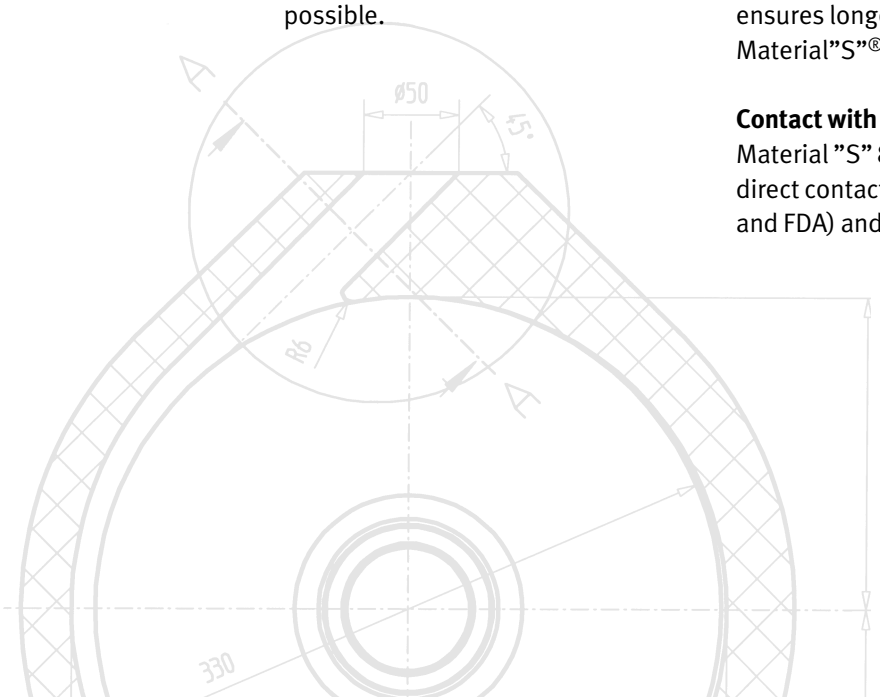

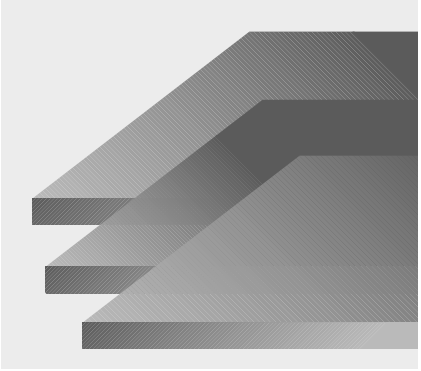

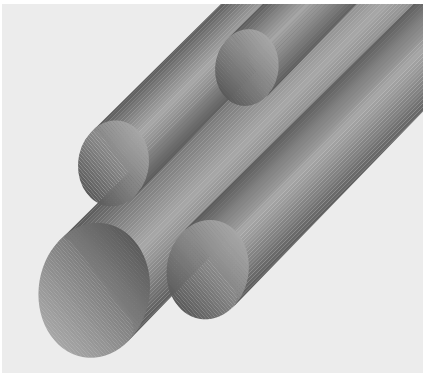

Semi-finished products cut to size
Do you need sheets/plates or round bars cut to size? We can meet your individual demands fast. A broad range of sizes in semi-finished products is also available ex-stock (see pp 17–20). Special sizes on request.

Finished products custom made
Do you need custom-made guide segments, slide rails, rollers, milled parts etc? We can fabricate and supply finished parts to your individual specification or drawings, even in very small quantities. We will be pleased to prepare a quote for you, free of charge and without obligation, of course.

Semi-finished product range

Material "S" 8000®

Sheets/plates, mm, planed

Thickness	Width	Length
8–100	1000	2000

Tolerances, mm

Thickness	Width/Length
+ 0/+0.6	≥ + 0

Round bars, mm, turned

Diameter	Length
10–80	1000

Tolerances, mm

Diameter	Length
+ 0/+1	≥ + 0

Discs, mm

Diameter	Thickness
> 200–1000	8–100

Tolerances, mm

Diameter	Length
+ 0/+2	≥ + 0/0.6

Colour
Material "S"8000® is supplied in this shade:

anthracite

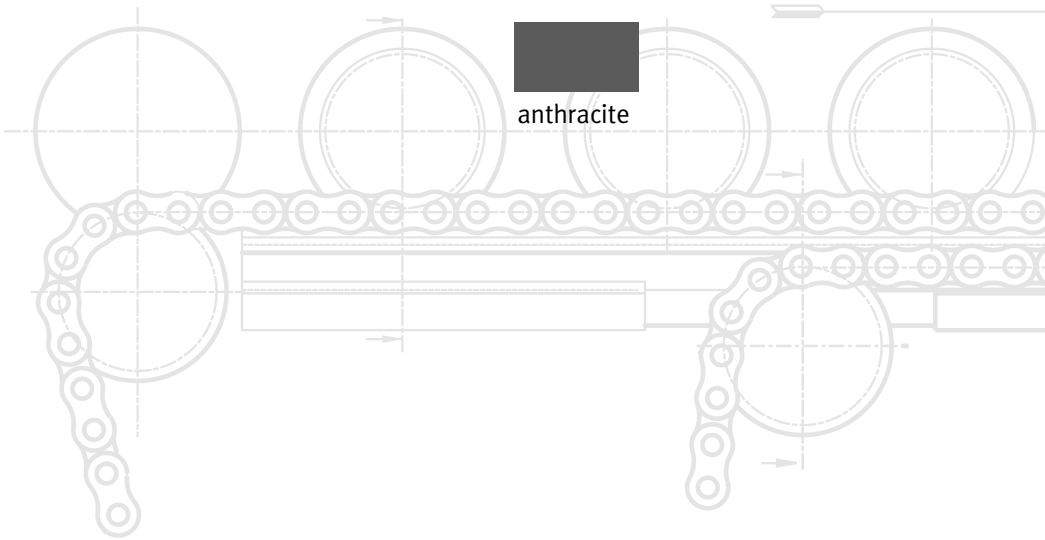

Murtfeldt **E-mail** info@murtfeldt.de

Material ”S” 8000®

Characteristic Values	**Material ”S” 8000®**	**Units**	**Test method DIN**	**Test method ISO/(IEC)**
Colour of material	anthracite	–	–	–
Density	0.96	kg/dm³	53479	1183
Average molecular weight	>7000000	g/mol	–	–
Moisture absorption:				
– when saturated in standard atmosphere of +23 °C/50 % rel. humidity	<0.1	%	–	–
– when saturated in water	<0.1	%	–	–
Mechanical Characteristics				
Yield stress/breaking stress	21/–	N/mm²	53455	527
Modulus of elasticity (tensile test)	750	N/mm²	53457	527
Notched bar impact strength (Charpy)	≥170	kJ/m²	53453	179
Ball impression hardness	43	N/mm²	53456	2039–1
Shore hardness D	65	°	53505	–
Sand-Slurry test	80	–	–	–
Sliding friction coefficient (dry)	0.08–0.12	–	–	–
Thermal Characteristics				
Average thermal expansion coefficient α:				
– between +23 and 100 °C	17×10^{-5}	m/(m x K)	–	–
Thermal conductivity at +23 °C	0.4	W/(K x m)	52612	–
Upper limit of operating temperature (continuous, in air)	+80	°C	–	–
Lower limit of operating temperature	–200	°C	–	–
Electrical Characteristics				
Dielectric strength	≤45	kV/mm	53481	(243)
Volume resistivity	$>10^{14}$	Ω x cm	53482	(93)
Surface resistance	$>10^{13}$	Ω	53482	(93)

All technical values are quoted without obligation.
For further details, please contact our Technical Department.

Original Material ”S”®

green, black antistatic, natural

To guarantee its high quality at all times, our Original Material ”S”® semi-finished products are fabricated exclusively to DIN 16972, Plate Group 2. Original Material ”S”® has high abrasion resistance, a low sliding friction coefficient, noise reduction, chemical resistance and approval for contact with food – a combination of qualities which is the ideal basis for a long, trouble and maintenance-free life in mechanical engineering applications.

Characteristics at a glance

- extremely high abrasion resistance even in abrasive applications
- excellent slide properties
- very good chemical resistance
- no moisture absorption
- excellent impact and shock absorption
- good anti-adhesion properties
- electrically insulating or antistatic, depending on type of material

Original Material ”S”® is ideal for a wide range of applications in the drive and materials handling industries. It is the only material to be produced on the basis of a pure ultra-macromolecular, low-pressure polyethylene.

Its raw materials to DIN 16783 and its manufacturing process – continuously optimized over more than 40 years by now – of sintering under pressure ensure that Original Material ”S”® retains the qualities which first opened up such a vast array of applications in mechanical engineering.

Slide and wear resistance
Original Material "S"® impresses by its excellent slide properties while at the same time offering high wear resistance. That means no need for additional lubrication, a reduction in your driving power requirements, and a long, maintenance-free life.

High notched bar impact strength
Original Material "S"® is suitable for designs using tough-at-subzero steel until now. Its exemplary notched bar impact strength even at low temperatures makes it an economical design alternative.

Approved for contact with food
Original Material "S"® green and natural are approved for direct contact with food and are physiologically safe (EU directives and FDA). Original Material "S"®black antistatic corresponds to the EU directives. On request it is also available with FDA admission. Original Material "S"® is free of CFCs, cadmium and silicone.

Chemically resistant
Original Material "S"® has good chemical resistance. So there is no need for additional surface protection during direct contact with chemicals, as there is with metals, for instance. It also means lower maintenance intervals than would otherwise be necessary due to corrosion.

Suitable for wet operating conditions
Original Material "S"® does not absorb moisture, so does not show any dimensional fluctuations in wet operating conditions. All characteristic values remain constant.

Noise reducing
Its good noise absorption qualities mean that Original Material "S"® significantly reduces any operating and impact noises. So there should be no need for costly noise absorption installations on the plant. And the goods being handled are being protected against damage, too.

No freezing or caking
Its paraffin-like surface means that Original Material "S"® prevents the freezing or caking of moist goods being handled.

Insulation
Original Material "S"® green and natural are both electrically and thermally insulating. Their resistance to stress corrosion ensures long-term applications and long life.

Antistatic
Original Material "S"® black antistatic is used wherever antistatic qualities are required. The addition of high-conductivity carbon results in electrical charges being dissipated. Original Material "S"® black is also more UV- resistant which is especially important for outdoor applications.

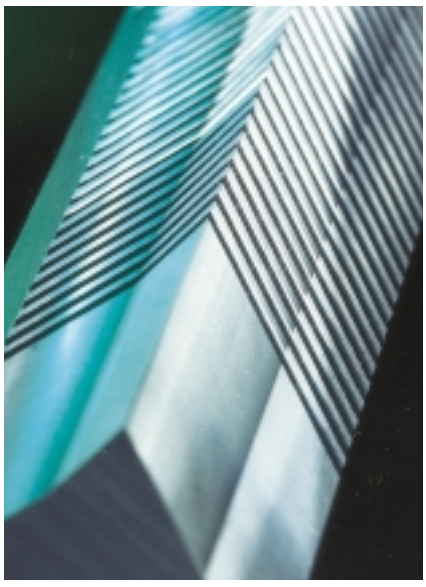

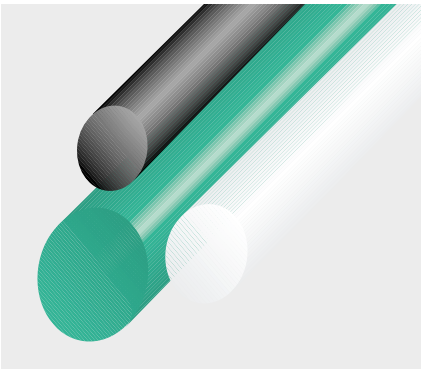

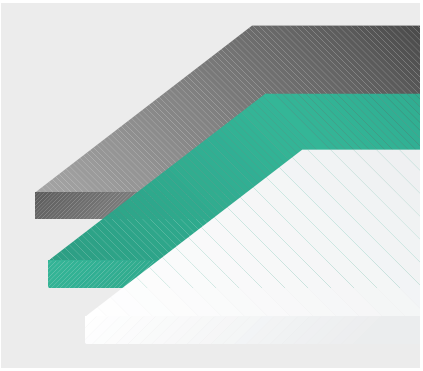

Semi-finished product range

Original Material "S"® (semifinished to DIN16972 Plate Group 2)
Sheets ≤ 6mm thick are supplied split.
Sheets/plates > 6mm thick are planed.
Original Material "S"® green, natural, black antistatic

Semi-finished products cut to size
Do you need sheets/plates or round bars cut to size? We can meet your individual demands fast. A broad range of sizes in semi-finished products is also available ex-stock (see pp 17–20). Special sizes and colours on request.

Finished products custom made
Do you need custom-made guide segments, slide rails, rollers, milled parts etc? We can fabricate and supply finished parts to your individual specification or drawings, even in very small quantities. We will be pleased to prepare a quote for you, free of charge and without obligation, of course.

Sheets/plates, mm, planed

Thickness	Width	Length
2 – 200	1000	2000
2 – 6	1200	3000
8 – 60	1220	3000
10 – 50	650	6000

Tolerances, mm

Thickness ≤ 6	Thickness ≥ 8	Width/Length
+ 0/+ 0.8	+ 0/+ 0.6	≥ + 0

Round bars, mm, turned

Diameter	Length
10 – 200	1000

Tolerances, mm

Diameter	Length
+ 0/+ 1	≥ + 0

Discs, mm, turned

Diameter	Thickness
210 – 400	1000
400 – 1000	2 – 100

Tolerances, mm

Diameter	Thickness
+ 0/+ 2	≥ + 0

Colours
Original Material "S"® is supplied in three shades:

green, natural, black

Murtfeldt **E-mail** info@murtfeldt.de

Original Material "S"®

Characteristic Values	**Original Material "S"® green/ natural**	**Original Material "S"® black antistatic**	**Units**	**Test method DIN**	**Test method ISO/(IEC)**
Colour of material	green/white	black	–	–	–
Density	≥0.93	≥0.93	kg/dm^3	53479	1183
Average molecular weight	ca. 5 x 10^6	ca. 5 x 10^6	g/mol	–	–
Moisture absorption:					
– when saturated in standard atmosphere of +23 °C/50 % rel. humidity	< 0.1	< 0.1	%	–	–
– when saturated in water	< 0.1	< 0.1	%	–	–
Mechanical Characteristics					
Yield stress/breaking stress	≥ 17/–	≥ 17/–	N/mm^2	53455	527
Modulus of elasticity (tensile test)	700	700	N/mm^2	53457	527
Notched bar impact strength (Charpy)	≥170	≥170	kJ/m^2	53453	179
Ball impression hardness	38	40	N/mm^2	53456	2039–1
Shore hardness D	66	64	°	53505	–
Sand-Slurry test	100 +/–10	100 +/–10	–	–	
Sliding friction coefficient (dry)	0.1–0.2	0.1–0.2	–	–	–
Thermal Characteristics					
Average thermal expansion coefficient α:					
– between +23 and 100 °C	20 x 10^{-5}	20 x 10^{-5}	m/(m x K)	–	–
Thermal conductivity at +23 °C	0.4	0.4	W/(K x m)	52612	–
Upper limit of operating temperature (continuous, in air)	+ 80	+ 80	°C	–	–
Lower limit of operating temperature	–200	–200	°C	–	–
Electrical Characteristics					
Dielectric strength	45	–	kV/mm	53481	(243)
Volume resistivity	> 10^{14}	≤ 10^6	Ω x cm	53482	(93)
Surface resistance	> 10^{13}	≤ 10^9	Ω	53482	(93)

All technical values are quoted without obligation.
For further details, please contact our Technical Department.

Material ”S”1000®

green, black antistatic

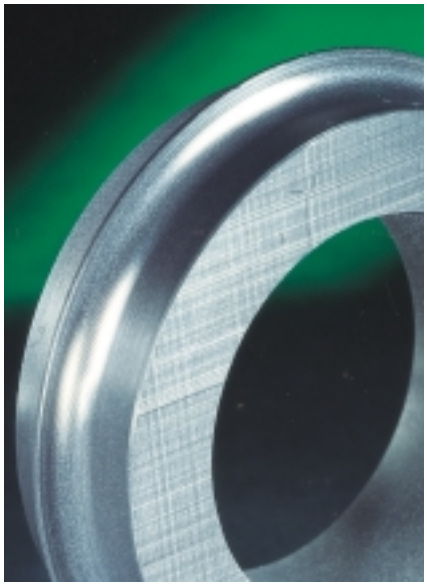

Antistatic
Material ”S” 1000® black has antistatic qualities so electrical charges are dissipated.

Contact with food
Material ”S” 1000® is physiologically safe but is not approved for direct contact with food.

Characteristics at a glance

- environmentally friendly
- economical
- wear resistant
- good slide properties
- no moisture absorption
- good chemical resistance
- impact and shock absorption
- good anti-adhesion properties
- electrically insulating or antistatic, depending on type of material

Material ”S” 1000® is exclusively produced from ultra-macromolecular polyethylene. Its hi-tech manufacturing process mixes pure ultra-macromolecular polyethylene powder with ground Original Material ”S”®. Under both high pressure and high temperature, this finely ground powder is then pressed into new semi-finished products. The result is a high-quality type of material impressive for its high abrasion resistance, good slide qualities and a very positive price-performance ratio.

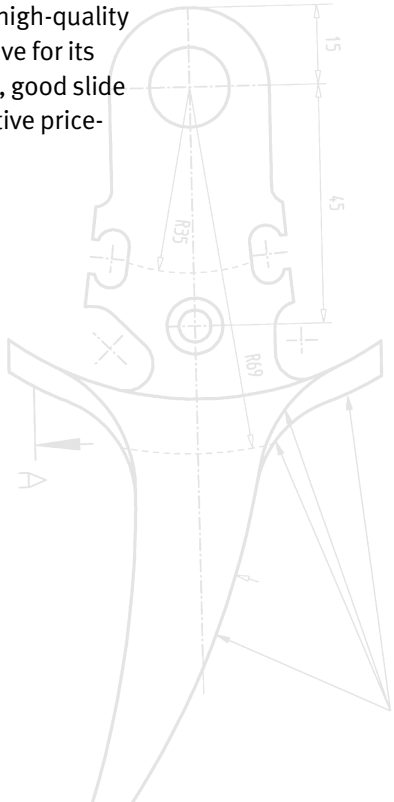

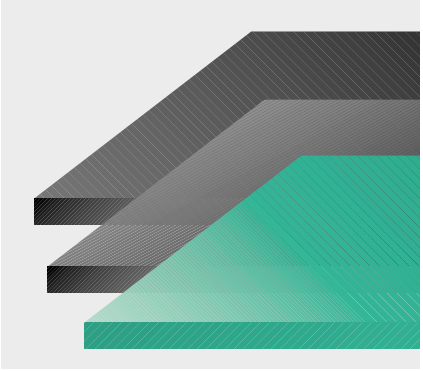

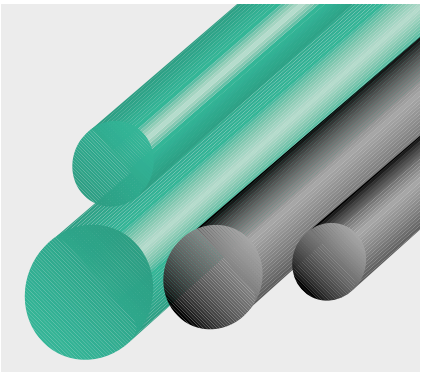

Semi-finished products cut to size
Do you need sheets/plates or round bars cut to size? We can meet your individual demands fast. A broad range of sizes in semi-finished products is also available ex-stock (see pp 17–20). Special sizes and colours on request.

Finished products custom made
Do you need custom-made guide segments, slide rails, rollers, milled parts etc? We can fabricate and supply finished parts to your individual specification or drawings, even in very small quantities. We will be pleased to prepare a quote for you, free of charge and without obligation, of course.

Semi-finished product range

Material ”S” 1000®
Sheets ≤ 6mm thick are supplied split.
Sheets/plates > 6mm thick are planed.
Material ”S” 1000® green, black antistatic

Sheets/plates, mm, planed

Thickness	Width	Length
2 – 160	1000	2000
2 – 6	1200	3000
8 – 60	1220	3000
10 – 50	650	6000

Tolerances, mm

Thickness ≤ 6	Thickness ≥ 8	Width/Length
+ 0/+ 0.8	+ 0/+ 0.6	≥ + 0

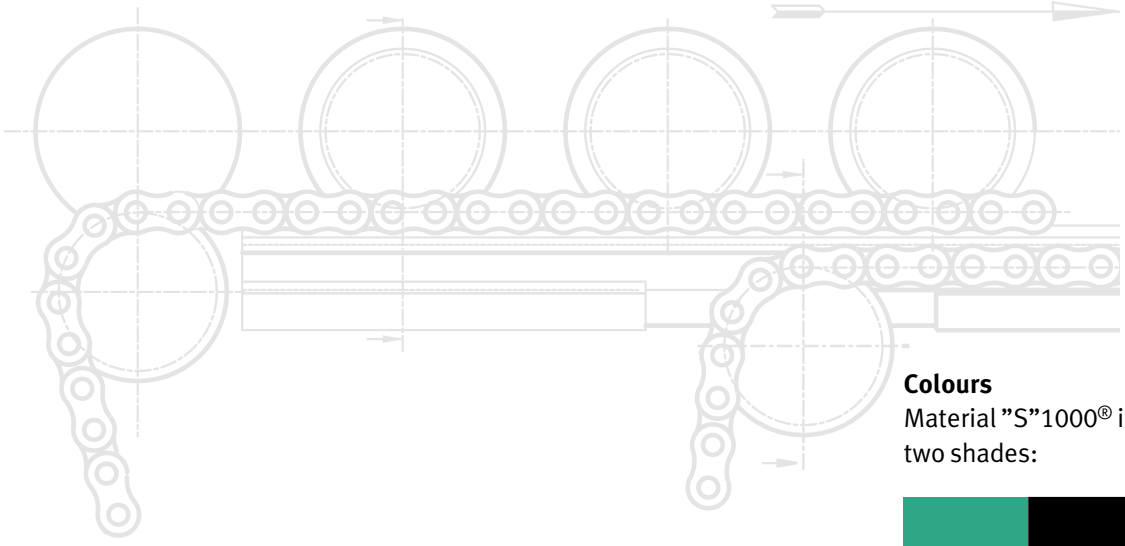

Colours
Material ”S”1000® is supplied in two shades:

green, black

Material "S" 1000®

Characteristic Values	**Material "S" 1000® green**	**Material "S" 1000® black antistatic**	**Units**	**Test method DIN**	**Test method ISI/(IEC)**
Colour of material	green	black	–	–	–
Density	≥0.93	≥0.93	kg/dm³	53479	1183
Average molecular weight	ca. 5 x 10^6	ca. 5 x 10^6	g/mol	–	–
Moisture absorption:					
- when saturated in standard atmosphere of +23 °C/50 % rel. humidity	<0.1	<0.1	%	–	–
- when saturated in water	<0.1	<0.1	%	–	–
Mechanical Characteristics					
Yield stress/breaking stress	≥15/–	≥20/–	N/mm²	53455	527
Modulus of elasticity (tensile test)	950	950	N/mm²	53457	527
Notched bar impact strength (Charpy)	≥80	≥80	kJ/m²	53453	179
Ball impression hardness	38	38	N/mm²	53456	2039–1
Shore hardness D	61–63	61–63	°	53505	–
Sand-Slurry test	125 +/–25	125 +/–25	–	–	–
Sliding friction coefficient (dry)	0.1–0.2	0.1–0.2	–	–	–
Thermal Characteristics					
Average thermal expansion coefficient α:					
– between +23 and 100 °C	20 x 10^{-5}	20 x 10^{-5}	m/(m x K)	–	–
Thermal conductivity at +23 °C	0.4	0.4	W/(K x m)	52612	–
Upper limit of operating temperature (continuous, in air)	+80	+80	°C	–	–
Lower limit of operating temperature	–150	–150	°C	–	–
Electrical Characteristics					
Dielectric strength	–	–	kV/mm	53481	(293)
Volume resistivity	>10^{14}	≤10^6	Ω x cm	53482	(93)
Surface resistance	>10^{13}	≤10^9	Ω	53482	(93)

All technical values are quoted without obligation.
For further details, please contact our Technical Department.

Murlubric®

black

Characteristics at a glance

- high mechanical strength
- high abrasion resistance even in abrasive applications
- self-lubricating
- vibration-free running
- good dimensional stability
- low residual stress
- good lubricant resistance
- physiologically safe

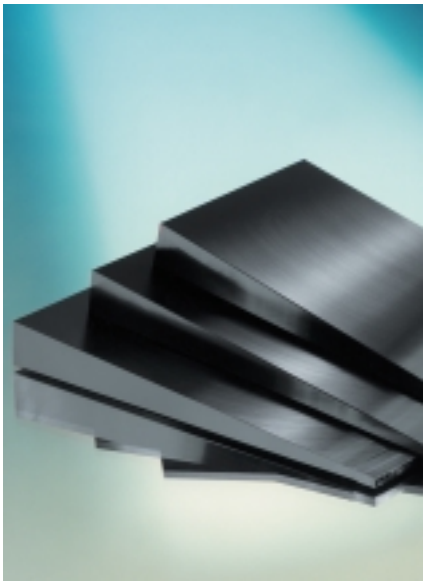

Murlubric®'s foremost qualities are its very low sliding friction and its high abrasion resistance coupled with its mechanical strength. That is why it is especially suitable for high-stress slide and wear applications up to 2 m/s.

Vibration-free running
Due to its low stick-slip behaviour, Murlubric® ensures the quiet and vibration-free running of your plant.

Good dimensional stability
During its manufacturing process, Murlubric® is modified with a mineral oil and additional stabilizers, making it resistant to lubricants based on mineral oils.

Contact with food
Murlubric® is physiologically safe but is not approved for direct contact with food.

High mechanical strength
Its high-crystalline structure and its special alloy components give Murlubric® its high mechanical strength.

Slide and wear resistance
Compared to all other Murylon® materials, Murlubric® has the lowest sliding friction coefficient apart from Material "S" 8000®, and is therefore especially suitable for high-speed, high-stress slide and wear applications.

Self-lubricating
Murlubric® is a modified cast polyamide with a mineral oil permanently bonded-in during polymerization. In slide applications, this modification ensures permanent lubrication for the rest of its life, so there is no need for any additional lubrication, which in turn lowers your operating and maintenance costs.

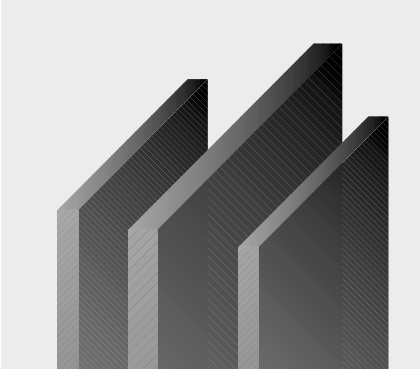

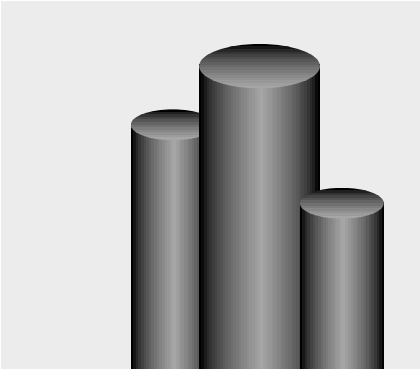

Semi-finished products cut to size
Do you need sheets/plates or round bars cut to size? We can meet your individual demands fast. A broad range of sizes in semi-finished products is also available ex-stock (see pp 17–20). Special sizes and colours on request.

Finished products custom made
Do you need custom-made guide segments, slide rails, milled parts etc? We can fabricate and supply finished parts to your individual specification or drawings, even in very small quantities. We will be pleased to prepare a quote for you, free of charge and without obligation, of course.

Semi-finished product range

Murlubric®

Sheets/plates, mm, planed

Thickness	Width	Length
8–100	1000	2000
110–200*	1000	1000

Tolerances, mm

Thickness	Width/Length
+ 0/+ 0.6 *(≥ + 0)	≥ + 0

Round bars, mm, turned/cast

Diameter	Length
10–200	1000

Tolerances, mm

Diameter	Length
≥ + 0	≥ + 0

Discs, hollow bare, mm

on request

Colour
Murlubric® is supplied in this shade:

black

Murlubric®

Characteristic Values		**Murlubric®**	**Units**	**Test method DIN**	**Test method ISO/(IEC)**
Colour of material		black	–	–	–
Density		1.14	kg/dm³	53479	1183
Moisture absorption:					
- when saturated in standard atmosphere of +23 °C/50% rel. humidity			1.8	%	–
- when saturated in water		5.5–6.5	%	–	–
Mechanical Characteristics					
Yield stress/breaking stress	+	70/–	N/mm²	53455	527
	++	40/–			
Modulus of elasticity (tensile test)	+	3000	N/mm²	53457	527
	++	1700			
Notched bar impact strength (Charpy)	+	5–6	kJ/m²	53453	179
Ball impression hardness	+	140	N/mm²	53456	2039–1
Shore hardness D	+	75	°	53505	–
Sliding friction coefficient (dry)	+	0.18	–	–	–
Thermal Characteristics					
Average thermal expansion coefficient α:					
- between +23 and 100 °C		9×10^{-5}	m/(m x K)	–	–
Thermal conductivity at +23 °C		0.23	W/(K x m)	52612	–
Upper limit of operating temperature (continuous, in air)		+100	°C	–	–
Lower limit of operating temperature		–40	°C	–	–
Electrical Characteristics					
Dielectric strength	+	22	kV/mm	53481	(243)
	++	14			
Volume resistivity	+	$>10^{14}$	Ω x cm	53482	(93)
	++	$>10^{12}$			
Surface resistance	+	$>10^{13}$	Ω	53482	(93)
	++	$>10^{12}$			

Legend:
+ values for dry material
++ values for material stored at standard atmosphere of +23 °C /50 % rel. humidity

All technical values are quoted without obligation.
For further details, please contact our Technical Department.

Murylon®

white/beige/black

The various types of Murylon® material available allow you to choose that which most exactly matches the properties required for your individual application. That way, modification/repair costs later on can be avoided from the start, at the design stage.

Elasticity
Due to their homogeneous, part-crystalline structure, Murylon® materials have high elasticity and are therefore fatigue resistant at dynamic or alternating loads. This in turn prevents downtimes and repair costs at your plant.

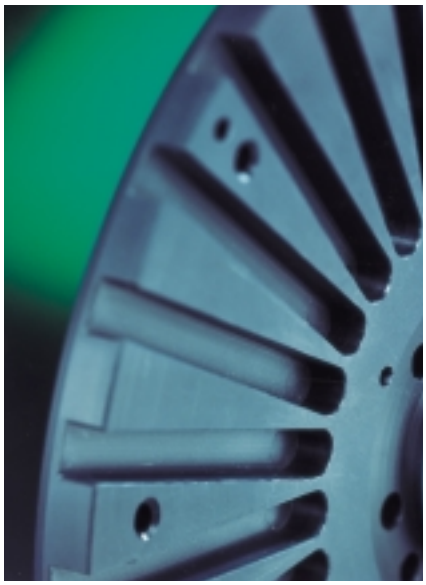

Characteristics at a glance

- high elasticity
- good impact strength
- low cold flow
- optimum wear resistance
- approved for contact (incl. direct) with food, subject to type of material
- potted metal core optional, subject to type of material

Impact strength
In applications subject to impact and shock stresses, Murylon® materials can be used without costly additional protection. Furthermore, they are also noise-reducing and impact-absorbing.

Low cold flow
Its good cold flow properties make Murylon® an attractive material for applications with static loads. Even then, its stressed components develop only small dimensional changes. Using Murylon® materials leads to a significant weight reduction in your drive and materials handling plant.

Wear resistant
In addition to their other qualities, Murylon® materials offer optimum wear resistance, making them ideal for applications in mechanical engineering.

Murylon® B natural

white

Characteristics at a glance

- good impact strength
- high elasticity
- outstanding toughness
- low cold flow
- good wear resistance
- approved for contact with food

Impact strength
Murylon® B natural was developed on the basis of an extruded polyamide 6E. Its good mechanical strength and abrasion resistance make it especially suitable for applications in mechanical engineering. It is outstandingly tough, easily machinable und economical.

Contact with food
Murylon® B is approved for direct contact with food (EU directive and FDA) and is physiologically safe.

sliding wear combination, plastics/steel (hardened)
running time 24h p=0.05N/mm², v=0.6m/sec., t=40 °C in running surface proximity

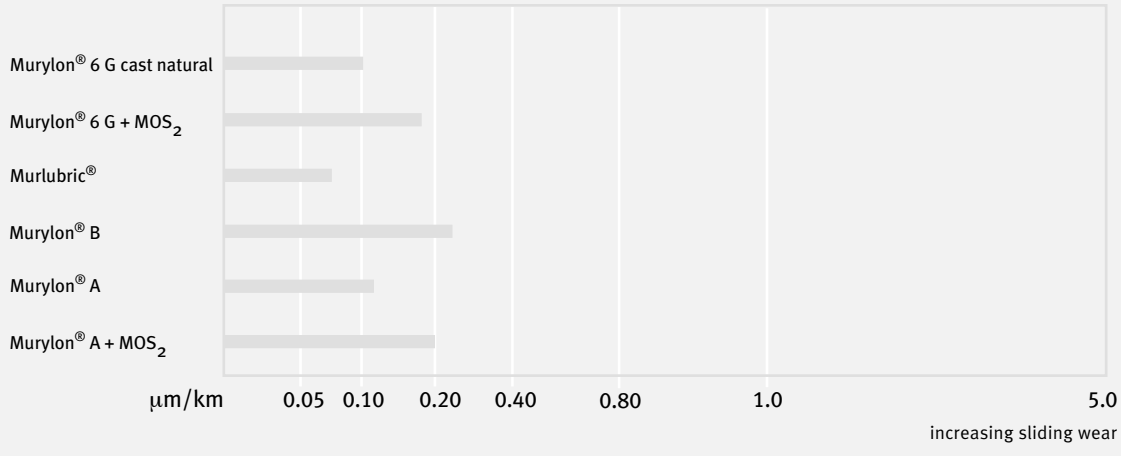

Semi-finished product range

Murylon® B natural

Sheets/plates, mm, extruded

Thickness	Width	Length
3– 60	1000	2000
70– 100	610	2000

Tolerances, mm

Thickness/Width/Length

to DIN16986

Round bars, mm, extruded

Diameter	Length
5–200	1000

Tolerances, mm

Diameter/Length

to DIN16980

Discs, hollow bars, mm

on request

Colour

Murylon® B natural ist supplied this shade:

white

Semi-finished products cut to size

Do you need sheets/plates or round bars cut to size? We can meet your individual demands fast. A broad range of sizes in semi-finished products is also available ex-stock (see pp 17–20). Special sizes and colours on request.

Finished products custom made

Do you need custom-made guide segments, slide rails, rollers, milled parts etc? We can fabricate and supply finished parts to your individual specification or drawings, even in very small quantities. We will be pleased to prepare a quote for you, free of charge and without obligation, of course.

Murylon® A natural

beige

Characteristics at a glance

- high impact strength
- high elasticity
- low cold flow
- good wear resistance
- approved for contact with food

Impact strength
Murylon®A natural was developed on the basis of an extruded polyamide 66. Compared to Murylon® B natural, its E-modulus as well as tensile- and compression strength are slightly better.

Contact with food
Murylon® A natural is approved for direct contact with food (EU directive and FDA) and is physiologically safe.

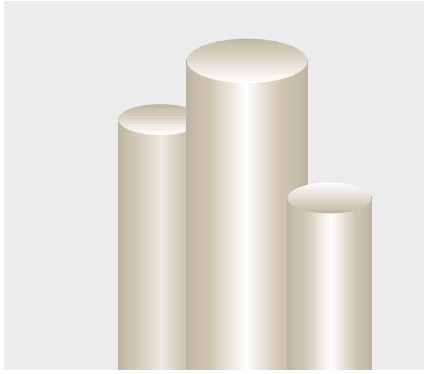

Semi-finished products cut to size
Do you need sheets/plates or round bars cut to size? We can meet your individual demands fast. A broad range of sizes in semi-finished products is also available ex-stock (see pp 17–20). Special sizes and colours on request.

Finished products custom made
Do you need custom-made guide segments, slide rails, rollers, milled parts etc? We can fabricate and supply finished parts to your individual specification or drawings, even in very small quantities. We will be pleased to prepare a quote for you, free of charge and without obligation, of course.

Semi-finished product range

Murylon® A natural

Sheets/plates, mm, extruded

Thickness	Width	Length
8–60	610	2000

Tolerances, mm

Thickness/Width/Length
to DIN16986

Round bars, mm, extruded

Diameter	Length
5–200	1000

Tolerances, mm

Diameter/Length
to DIN16980

Discs, hollow bars, mm

on request

Colour
Murylon® A natural is supplied in this shade:

beige

Murylon® A black + GF

black

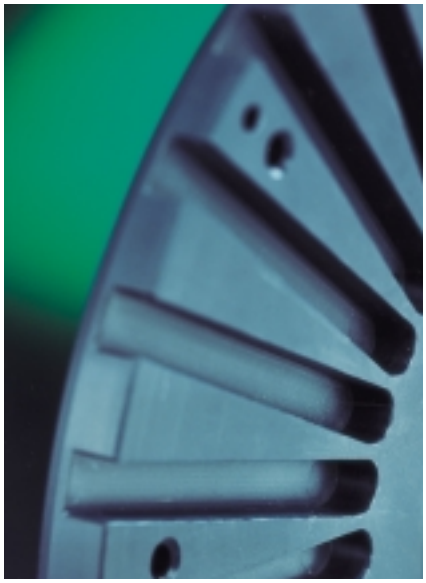

Characteristics at a glance

- high compressive strength
- outstanding cold flow properties
- high rigidity
- wear resistant
- higher dimensional stability than all other Murylon® materials
- higher operating temperature (+ 120 °C)

Cold flow properties
In order to improve the already highly developed properties of Murylon® A yet further, fibreglass was added, giving the new material, Murylon® black + GF, still better cold flow qualities and dimensional stability and allowing even higher static and dynamic loads.

Contact with food
Murylon® A black + GF is not approved for direct contact with food but is physiologically safe.

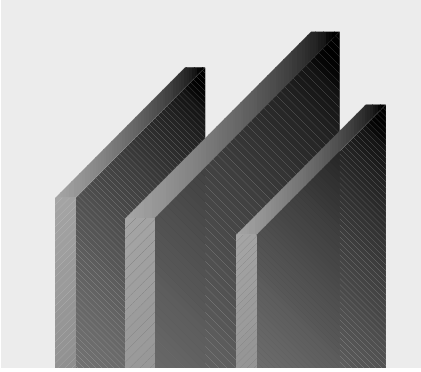

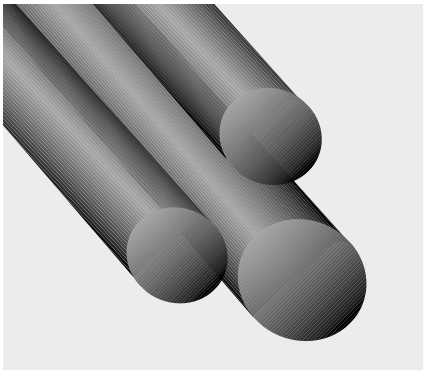

Semi-finished products cut to size
Do you need sheets/plates or round bars cut to size? We can meet your individual demands fast. A broad range of sizes in semi-finished products is also available ex-stock (see pp 17–20). Special sizes and colours on request.

Finished products custom made
Do you need custom-made guide segments, slide rails, milled parts etc? We can fabricate and supply finished parts to your individual specification or drawings, even in very small quantities. We will be pleased to prepare a quote for you, free of charge and without obligation, of course.

Semi-finished product range

Murylon® A black + GF

Sheets/plates, mm, extruded

Thickness	Width	Length
10–100	625	2000

Tolerances, mm

Thickness	Width/Length
to DIN16986	≥ + 0

Round bars, mm, extruded

Diameter	Length
10–200	1000

Tolerances, mm

Diameter	Length
to DIN16980	≥ + 0

Discs, hollow bars, mm

on request

Colour
Murylon® A black + GF is supplied in this shade:

black

Murylon® 6 cast natural

beige

Characteristics at a glance

- high elasticity
- good impact strength
- low cold flow
- optimum wear resistance
- low residual stress
- flexibility due to production process permits large-volume products
- physiologically safe

Low residual stress
Due to its specialised production process, Murylon® 6 cast natural has the lowest levels of residual stress and is therefore especially suitable for components requiring lower tolerances in dry environments. Its production process (casting) also makes it the ideal material for large sizes or complex designs. Optimum wear resistance at low to medium temperatures is among its other qualities.

Contact with food
Murylon® 6 cast natural is physiologically safe and can, on request, be supplied with approval for direct contact with food (EU directive and FDA).

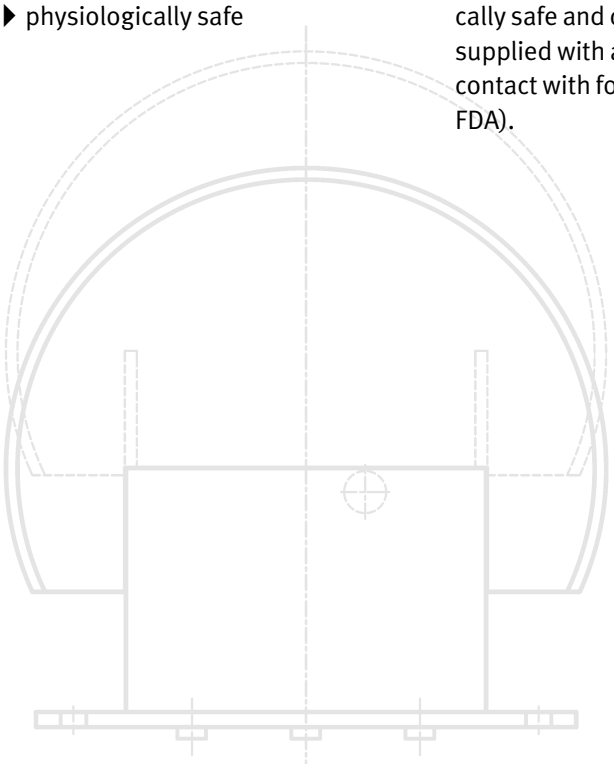

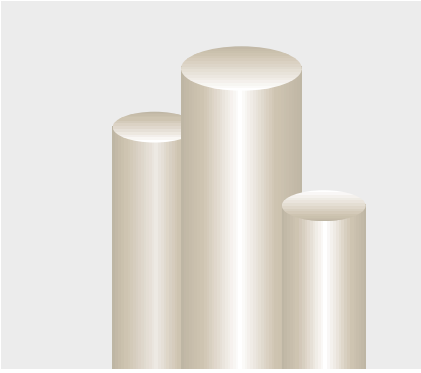

Semi-finished product range

Murylon® 6 cast natural

Sheets/plates, mm, cast

Thickness	Width	Length
8–100	1000	2000

Tolerances, mm

Thickness/Width/Length
to DIN16986

Round bars, mm, cast

Diameter	Length
50–200	1000

Tolerances, mm

Diameter/Length
to DIN16980

Discs, hollows bars, mm

on request

Semi-finished products cut to size
Do you need sheets/plates or round bars cut to size? We can meet your individual demands fast. A broad range of sizes in semi-finished products is also available ex-stock (see pp 17–20). Special sizes and colours on request.

Finished products custom made
Do you need custom-made guide segments, slide rails, rollers, milled parts etc? We can fabricate and supply finished parts to your individual specification or drawings, even in very small quantities. We will be pleased to prepare a quote for you, free of charge and without obligation, of course.

Colour
Murylon® 6 cast natural is supplied in this shade:

beige

Murtfeldt **E-mail** info@murtfeldt.de

Murylon®

Characteristic Values		**Murylon® B natural**	**Murylon® A natural**	**Murylon® A black + GF (30%)**	**Murylon® 6 cast natural**	**Units**	**Test method DIN**	**ISO/ (IEC)**
Colour of material		white	beige	black	beige	–	–	–
Density		1.14	1.14	1.29	1.15	kg/dm³	53479	1183
Moisture absorption:								
– when saturated in standard atmosphere of +23 °C/50 % rel. humidity		2.6	2.4	1.7	2.2	%	–	–
– when saturated in water		9	8	5.5	6.5	%	–	–
Mechanical Characteristics								
Yield stress/	+	76/–	90/–	–/100	85/–	N/mm²	53455	527
breaking stress	++	45/–	55/–	–/75	55/–			
Modulus of elasticity (tensile test)	+	3250	3450	5900	3500	N/mm²	53457	527
	++	1400	1650	3200	1700			
Notched bar impact strength (Charpy)	+	5.5	4.5	6	3.5	kJ/m²	53453	179
Ball impression hardness	+	150	160	165	165	N/mm²	53456	2039–1
Shore hardness D	+	76	81	82–83	77	°	53505	–
Sliding friction coefficient (dry)	+	0.35	0.30	0.35	0.30	–	–	–
Thermal Characteristics								
Average thermal expansion coefficient α:								
– between +23 and +100 °C		10.5×10^{-5}	9.5×10^{-5}	6×10^{-5}	9×10^{-5}	m/(m x K)	–	–
Thermal conductivity at +23 °C		0.28	0.28	0.30	0.29	W/(K x m)	52612	–
Upper limit of operating temperature (continuous, in air)		+90	+95	+120	+105	°C	–	–
Lower limit of operating temperature		–40	–30	–20	–30	°C	–	–
Electrical Characteristics								
Dielectric strength	+	25	27	30	25	kV/mm	53481	(243)
	++	16	18	20	17			
Volume resistivity	+	$>10^{14}$	$>10^{14}$	$>10^{14}$	$>10^{14}$	Ω x cm	53482	(93)
	++	$>10^{12}$	$>10^{12}$	$>10^{13}$	$>10^{12}$			
Surface resistance	+	$>10^{13}$	$>10^{13}$	$>10^{13}$	$>10^{13}$	Ω	53482	(93)
	++	$>10^{12}$	$>10^{12}$	$>10^{12}$	$>10^{12}$			

Legende:
+ values for dry material
++ values for material stored at standard atmosphere of +23 °C/50 % rel. humidity

All technical values are quoted without obligation.
For further details, please contact our Technical Department.

Murylon® SC

beige

Characteristics at a glance

- high elasticity
- good impact strength
- potted metal core optional
- good absorption properties
- optimum power transmission to shaft hub
- physiologically safe

Plastic-potted metal core
Murylon® SC is made by a non-pressure casting process on the basis of a copolyamide. Thus modified and combined with a plastic potted core, it produces insoluble shaft-hub connections.

This type of shaft-hub connection makes Murylon® SC an economical material for toothed gears and rollers with high concentricity. It combines the advantages of a plastic toothed gear (e.g. no lubrication required) with those of a steel toothed gear (good shaft connection). Machining both plastic and metal in one setting results in extremely high concentricity means that Murylon® SC prevents vibrations due to unbalanced toothed gears and rollers. Further advantages are the savings in weight compared to steel-only designs and the low cost of the material.

Compared to Murdopol®, Murylon® SC offers a more economical plastic-metal connection and higher elasticity combining more or less the properties of our Murylon 6G with the advantages of a potted metal core.

Contact with food
Murylon® SC is not approved for direct contact with food but is physiologically safe.

Semi-finished product range

Murylon® SC

Sheets/plates, mm, cast

Thickness	Width	Length
10–100	1000	2000

Tolerances, mm

Thickness/Width/Length
to DIN16986

Round bars with/without steel core, mm, cast

Diameter		Length
50–200	without steel core	610
80–210	with steel core	610

Tolerances, mm

Diameter/Length
to DIN16980

Discs, mm

on request

Colour

Murylon® SC is supplied in this shade:

beige

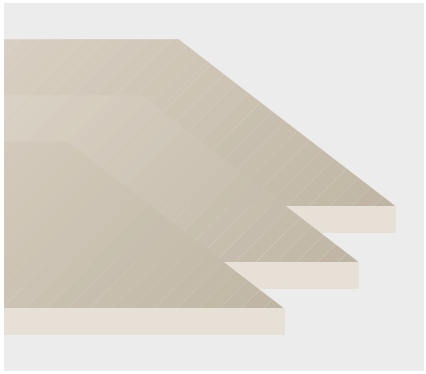

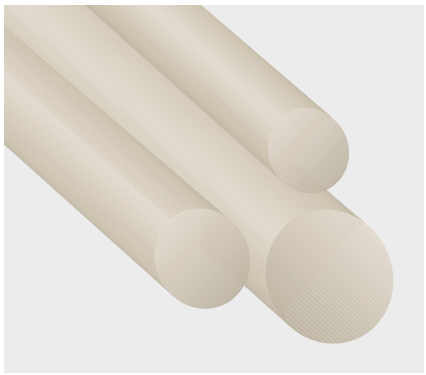

Semi-finished products cut to size

Do you need sheets/plates or round bars cut to size? We can meet your individual demands fast. A broad range of sizes in semi-finished products is also available ex-stock (see pp 17–20). Special sizes and colours on request.

Finished products custom made

Do you need custom-made guide segments, slide rails, rollers, milled parts etc? We can fabricate and supply finished parts to your individual specification or drawings, even in very small quantities. We will be pleased to prepare a quote for you, free of charge and without obligation, of course.

Murylon® SC

Characteristic Values		**Murylon® SC**	**Units**	**Test method DIN**	**Test method ISO/(IEC)**
Colour of material		beige	–	–	–
Density		1.12	kg/dm³	53479	1183
Moisture absorption:					
– when saturated in standard atmosphere of +23 °C/50 % rel. humidity			1.8	%	– –
– when saturated in water		–	%	–	–
Mechanical Characteristics					
Yield stress/breaking stress	+	80/55	N/mm²	53455	527
Modulus of elasticity (tensile test)	+	2500	N/mm²	53457	527
Notched bar impact strength (Charpy)	+	10–12	kJ/m²	53453	179
Ball impression hardness	+	132	N/mm²	53456	2039–1
Shore hardness D	+	77	°	53505	–
Sand-Slurry test		–	–	–	–
Sliding friction coefficient (dry)	+	–	–	–	–
Thermal Characteristics					
Average thermal expansion coefficient α:					
– between +23 and +100 °C		10×10^{-5}	m/(m x K)	–	–
Thermal conductivity at +23 °C		–	W/(K x m)	52612	–
Upper limit of operating temperature (continuous, in air)		+90	°C	–	–
Lower limit of operating temperature		–40	°C	–	–
Electrical Characteristics					
Dielectric strength	+	50	kV/mm	53481	(243)
Volume resistivity	+	10^{15}	Ω x cm	53482	(93)
Surface resistance	+	10^{13}	Ω	53482	(93)

Legend:
+ values for dry material

All technical values are quoted without obligation.
For further details, please contact our Technical Department.

Murdopol®

beige

Characteristics at a glance

- good wear resistance
- high elasticity
- good impact strength
- low residual stresses
- potted metal core optional
- good absorption and vibration properties
- optimum power transmission to shaft hub
- low water absorption
- better chemical resistance
- physiologically safe

Due to its special qualities and its cast production process, Murdopol® offers insoluble, reliable and weight-saving plastic-metal connections and thus economical solutions for our clients.

Impact strength absorption
In applications subject to impact and shock stresses, Murdopol® can be used without costly additional protection. Furthermore, it is also noise-reducing and impact-absorbing.

Wear resistant
In addition to its good wear resistance, Murdopol® offers optimum resistance to galling, a quality making it an ideal material for toothed gears and rollers in particular and mechanical engineering in general. It also significantly reduces the weight of your drive systems and therefore minimises your driving power requirements.

Potted metal core
The firm shaft-hub connection in toothed gears and rollers made from Murdopol® combines the advantages of plastic with those of a metal toothed gear, machining both plastic and metal in one setting results in extremely high concentricity means that Murdopol® prevents vibrations due to unbalanced toothed gears and rollers. The shaft-hub connection is both nonpositive and positive and permits precise control over torque transmission, thus obviating overload damage to your drive systems.

Contact with food
Murdopol® is not approved for direct contact with food but is physiologically safe.

Murdopol®

Compressive stress as a function of temperature, at 0.1% and 1% compression to DIN53453

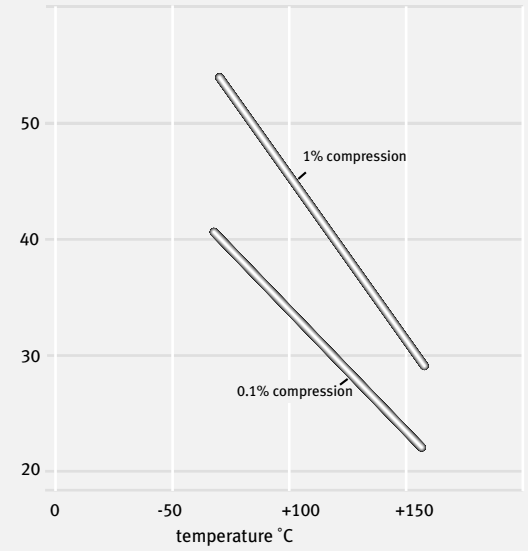

Murdopol®

Modulus of elasticity as a function of temperature test method to DIN53457

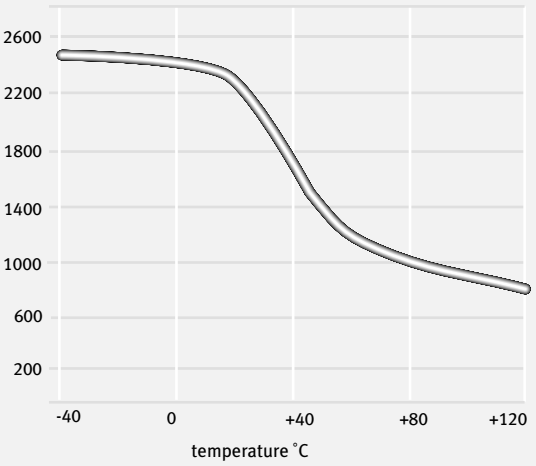

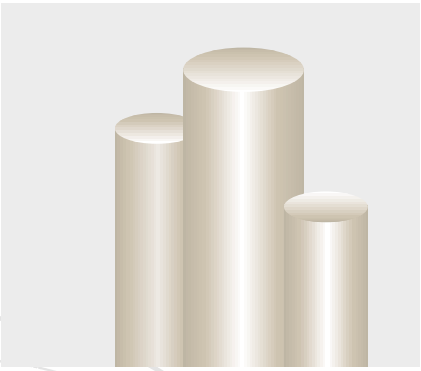

Semi-finished product range

Murdopol®

Sheets/plates, mm, cast

Thickness	Width	Length
10–100	1000	1000

Tolerances, mm

Thickness/Width/Length
to DIN16986

Round bars with/without steel core, mm, cast

Diameter/Length	
50–200	500

Tolerances, mm

Diameter/Length
to DIN16980

Discs, hollow bars, mm

on request

Colour

Murdopol® is supplied in this shade:

beige

Semi-finished products cut to size

Do you need sheets/plates or round bars cut to size? We can meet your individual demands fast. A broad range of sizes in semi-finished products is also available ex-stock (see pp 17–20). Special sizes and colours on request.

Finished products custom made

Do you need custom-made guide segments, slide rails, rollers, milled parts etc? We can fabricate and supply finished parts to your individual specification or drawings, even in very small quantities. We will be pleased to prepare a quote for you, free of charge and without obligation, of course.

Murdopol®

Characteristic Values		**Murdopol®**	**Units**	**Test method DIN**	**Test method ISO/(IEC)**
Colour of material		beige	–	–	–
Density		1.03	kg/dm³	53479	1183
Moisture absorption:					
– when saturated in standard atmosphere of +23 °C/50 % rel. humidity		0.9	%	–	–
– when saturated in water		1.4	%	–	–
Mechanical Characteristics					
Yield stress/breaking stress	+	50/–	N/mm²	53455	527
Modulus of elasticity (tensile test)	+	2200	N/mm²	53457	527
Notched bar impact strength (Charpy)	+	4–20	kJ/m²	53453	179
Ball impression hardness	+	98	N/mm²	53456	2039–1
Shore hardness D	+	76	°	53505	–
Sliding friction coefficient (dry)	+	–	–	–	–
Thermal Characteristics					
Average thermal expansion coefficient α:					
– between +23 and 100 °C		10–18 x 10^{-5}	m/(m x K)	–	–
Thermal conductivity at +23 °C		0.23	W/(K x m)	52612	–
Upper limit of operating temperature (continuous, in air)		+120	°C	–	–
Lower limit of operating temperature		–50	°C	–	–
Elektrische Eigenschaften					
Dielectric strength	+	50	kV/mm	53481	(243)
Volume resistivity	+	10^{15}	Ω x cm	53482	(93)
Surface resistance	+	10^{13}	Ω	53482	(93)

Legend:
+ values for dry material

All technical values are quoted without obligation.
For further details, please contact our Technical Department.

Murytal® C /Murytal® H

black/white

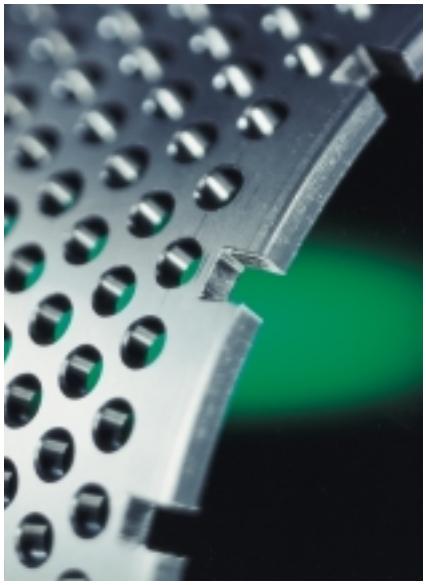

Characteristics at a glance

- high rigidity
- outstanding rebound elasticity
- very low moisture absorption
- high dielectric strength and insulation properties
- good chemical resistance
- approved for contact with food
- very good machinability

Murytal®C and H are ideal materials for components in applications subject to alternating or dynamic loads. Due to their low moisture absorption, they are also suitable for electrically insulating components in wet operating conditions. Their good machinability results in precision parts with minimum surface roughness.

Rigidity/rebound elasticity
Due to its microcrystalline structure combined with a high yield strength, Murytal® C has outstanding rebound elasticity. Murytal® H, too, has good rebound elasticity but, due to its slightly higher hardness, a higher rigidity. This quality enables both Murytal® C and H to be used in applications where materials characteristics need to remain constant in order to ensure high operating safety.

Chemical resistance
Murytal®C and H offer good resistance to many chemicals and therefore permit economical design solutions.

Contact with food
Murytal®C and H are approved for direct contact with food (EU directive and FDA) and are physiologically safe.

Suitable for wet operating conditions
Due to their very low moisture absorption, Murytal®C and H are neither subject to dimensional nor to insulation fluctuations when used in wet operating conditions, obviating additional protection systems and their associated costs.

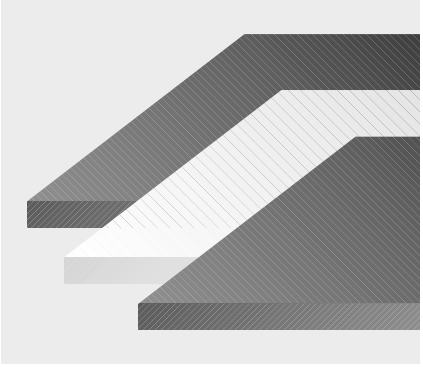

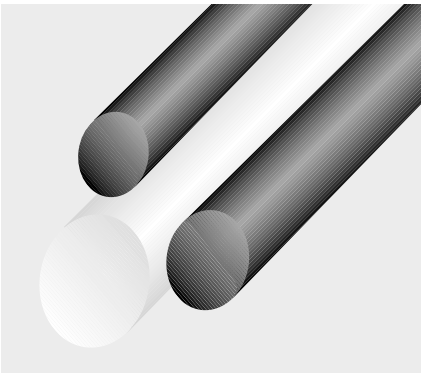

Semi-finished products cut to size
Do you need sheets/plates or round bars cut to size? We can meet your individual demands fast. A broad range of sizes in semi-finished products is also available ex-stock (see pp 17–20). Special sizes and colours on request.

Finished products custom made
Do you need custom-made guide segments, slide rails, rollers, milled parts etc? We can fabricate and supply finished parts to your individual specification or drawings, even in very small quantities. We will be pleased to prepare a quote for you, free of charge and without obligation, of course.

Semi-finished product range

Murytal® C natural/black

Sheets/plates, mm, extruded

Thickness	Width	Length
3– 60	1000	2000
70–100	610	2000

Tolerances, mm

Thickness/Width/Length
to DIN16986

Round bars, mm, extruded

Diameter	Length
5–200	1000

Tolerances, mm

Diameter/Length
to DIN16980

Discs, hollow bars, mm
Murytal® C natural/black

on request

Colours
Murytal® is supplied in these shades:

white, black

Semi-finished product range

Murytal® H natural

Sheets/plates, mm, extruded

Thickness	Width	Length
8–50	610	2000

Tolerances, mm

Thickness/Width/Length
to DIN16986

Round bars, mm, extruded

Diameter	Length
5–200	1000

Tolerances, mm

Diameter/Length
to DIN16980

Discs, hollow bars, mm

on request

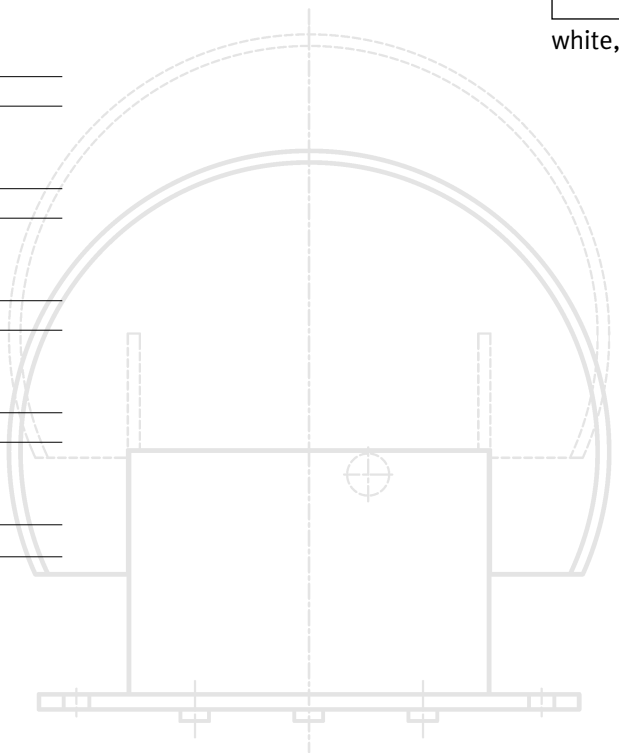

Murytal®

Characteristic Values		**Murytal® C natural/black**	**Murytal® H natural**	**Units**	**Test method DIN**	**Test method ISO/(IEC)**
Colour of material		white/black	white	–	–	–
Density		1.41	1.43	kg/dm³	53479	1183
Moisture absorption:						
– when saturated in standard atmosphere of +23 °C/50 % rel. humidity		0.2	0.2	%	–	–
– when saturated in water		0.85	0.85	%	–	–
Mechanical Characteristics						
Yield stress/breaking stress	+	68/–	78/–	N/mm²	53455	527
Modulus of elasticity (tensile test)	+	3100	3600	N/mm²	53457	527
Notched bar impact strength (Charpy)	+	7	10	kJ/m²	53453	179
Ball impression hardness	+	140	160	N/mm²	53456	2039–1
Shore hardness D	+	81	83	°	53505	–
Sand-Slurry test		–	–	–	–	–
Sliding friction coefficient (dry)	+	0.30	0.34	–	–	–
Thermal Characteristics						
Average thermal expansion coefficient α:						
– between +23 and 100 °C		12.5×10^{-5}	11×10^{-5}	m/(m x K)	–	–
Thermal conductivity at +23 °C		0.31	0.31	W/(K x m)	52612	–
Upper limit of operating temperature (continuous, in air)		+115	+105	°C	–	–
Lower limit of operating temperature		–50	–50	°C	–	–
Electrical Characteristics						
Dielectric strength	+	20	20	kV/mm	53481	(243)
Volume resistivity	+	$>10^{14}$	$>10^{14}$	Ω x cm	53482	(93)
Surface resistance	+	$>10^{13}$	$>10^{13}$	Ω	53482	(93)

Legend:
+ values for dry material

All technical values are quoted without obligation.
For further details, please contact our Technical Department.

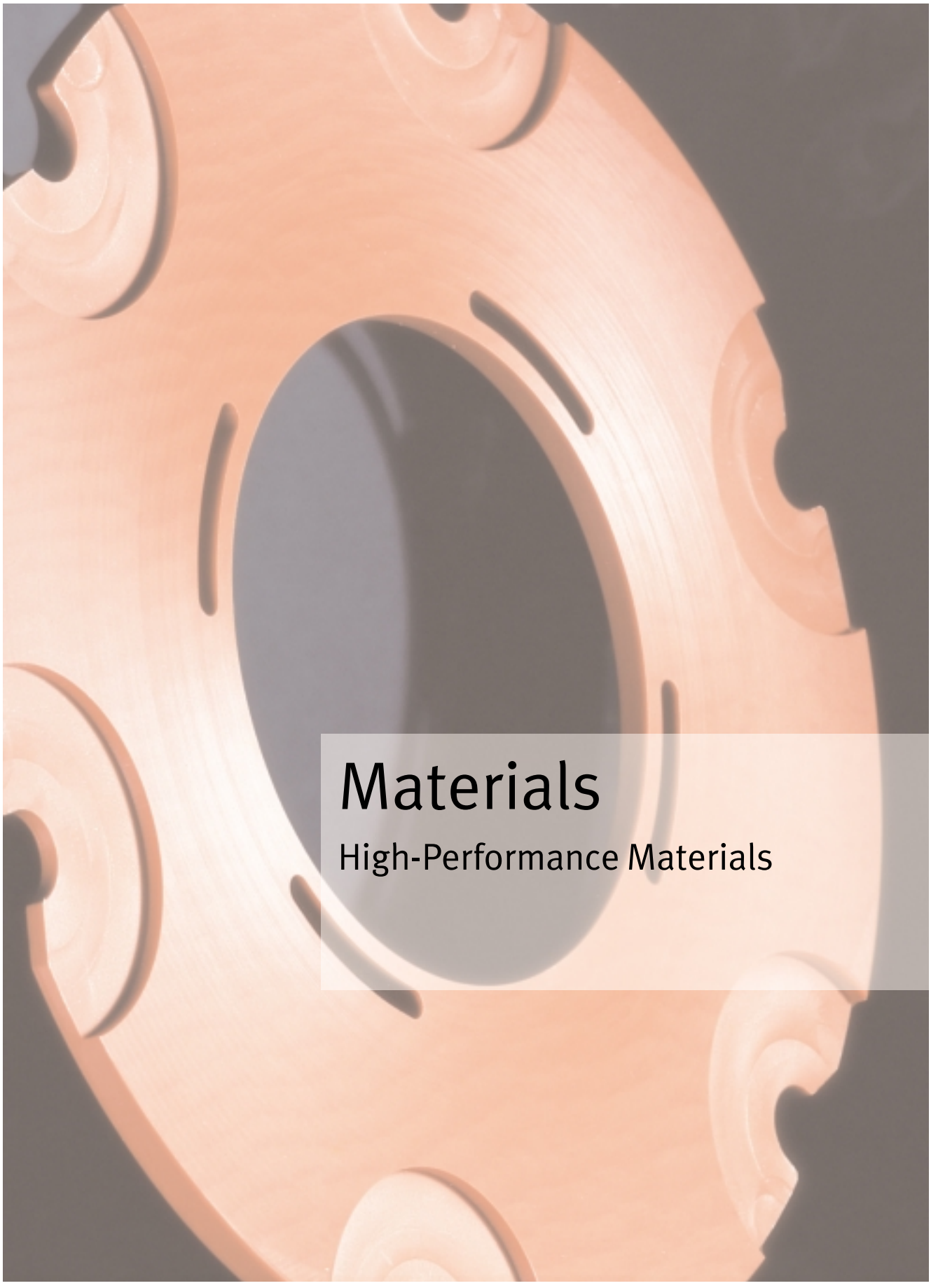

Materials

High-Performance Materials

High-Performance Materials

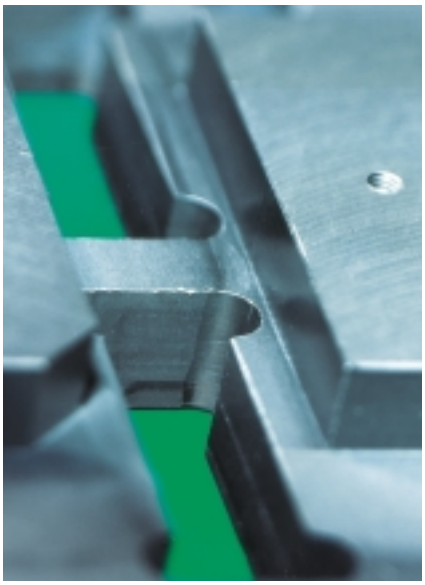

It is over 40 years since we at Murtfeldt introduced thermoplastics into mechanical engineering. Our focus was to develop plastics with optimum slide qualities and high wear resistance.

Relentless on-going improvements to existing technical materials have led to the development of new plastics for mechanically, thermally and chemically more demanding applications.

Our high-performance materials are variously able to tolerate extreme mechanical, thermal or chemical stresses even while subject to dynamic stress. Our range of high-performance materials offers you products specially adapted to meeting your own very individual demands.

Murylat®/Murylat® SP

white/light grey

Characteristics at a glance

- good slide and wear properties
- high creep resistance even at higher temperatures
- very good dimensional stability
- high dynamic load-bearing capacity
- good dimensional stability
- good UV resistance
- low moisture absorption
- approved for contact with food

Murylat® and Murylat® SP are part-crystalline plastics suitable for precision parts with good dimensional stability. Due to their very high hardness, they tolerate extreme stresses in static and dynamic applications.

Slide and wear properties
Modified with lubricants, the original Murylat becomes Murylat® SP and, as such, an ideal material for applications requiring good slide and wear properties. Compared to Murylat, Murylat® SP shows lower wear resistance, a lower sliding friction coefficient and higher dynamic stress resistance. Its good slide properties significantly reduce the driving power requirements at your plant and avoid stick-slip.

Creep resistance
Murylat® and Murylat® SP offer high creep resistance even at higher temperatures, making component installation more economical since no additional metal casings are needed.

Dimensional stability
Good dimensional stability for machined components, together with low moisture absorption and a low thermal expansion coefficient, permit a universal range of applications.

UV resistance
Murylat® and Murylat® SP feature good UV resistance and low moisture absorption, which is also why they can in principle be used outdoors. Nor, in contrast to metal components, is there any need for costly surface protection.

Contact with food
Murylat® and Murylat® SP are approved for direct contact with food (EU directive and FDA) and are physiologically safe.

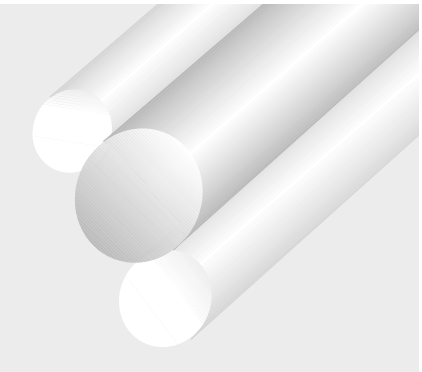

Semi-finished products cut to size
Do you need sheets/plates or round bars cut to size? We can meet your individual demands fast. A broad range of sizes in semi-finished products is also available ex-stock (see pp 17–20). Special sizes and colours on request.

Finished products custom made
Do you need custom-made guide segments, slide rails, milled parts etc? We can fabricate and supply finished parts to your individual specification or drawings, even in very small quantities. We will be pleased to prepare a quote for you, free of charge and without obligation, of course.

Semi-finished product range

Murylat®and Murylat® SP
Sheets/plates, mm, extruded

Thickness	Width	Length
8–100	610	2000

Tolerances, mm

Thickness	Width/Length
to DIN16986	≥ + 0

Round bars, mm, extruded
Murylat®

Diameter	Length
10–210	1000

Murylat® SP

Diameter	Length
10–150	1000

Tolerances, mm

Diameter	Length
to DIN16980	≥ + 0

Discs, hollow bars, mm
Murylat® and Murylat® SP

on request

Colours
Murylat® and Murylat® SP
are supplied in these shades:

white, light grey

Murylat®/Murylat® SP

Characteristic Values		**Murylat®**	**Murylat® SP**	**Units**	**Test method DIN**	**Test method ISO/(IEC)**
Colour of material		white	light grey[1)]	–	–	–
Density		1.39	1.44	kg/dm³	53479	1183
Moisture absorption:						
– when saturated in standard atmosphere of +23 °C/50 % rel. humidity		0.25	0.23	%	–	
– when saturated in water		0.50	0.47	%	–	–
Mechanical Characteristics						
Yield stress/breaking stress	+	90/–	–/76	N/mm²	53455	527
	++	90/–	–/76			
Modulus of elasticity (tensile test)	+	3700	3450	N/mm²	53457	527
	++	3700	3450			
Notched bar impact strength (Charpy)	+	2	2.5	kJ/m²	53453	179
Ball impression hardness	+	170	160	N/mm²	53456	2039–1
Shore hardness D	+	81	81	°	53505	–
Sliding friction coefficient (dry)	+	0.30	0.18	–	–	–
Thermal Characteristics						
Average thermal expansion coefficient α:						
– between +23 and 100 °C		8×10^{-5}	8.5×10^{-5}	m/(m x K)	–	–
Thermal conductivity at +23 °C		0.29	0.29	W/(K x m)	52612	–
Max. operating temperature (continuous, in air)		+115	+115	°C	–	–
Min. operating temperature		–20	–20	°C	–	–
Electrical Characteristics						
Dielectric strength	+	22	21	kV/mm	53481	(243)
	++	22	21			
Volume resistivity	+	$>10^{15}$	$>10^{15}$	Ω x cm	53482	(93)
	++	$>10^{15}$	$>10^{15}$			
Surface resistance	+	$>10^{14}$	$>10^{14}$	Ω	53482	(93)
	++	$>10^{14}$	$>10^{14}$			

Legend:
+ values for dry material
++ values for material stored at standard atmosphere of +23 °C/50 % rel. humidity

All technical values are quoted without obligation.
For further details, please contact our Technical Department.

[1)] can be supplied in white on request

Murylon® HT

reddish brown

Characteristics at a glance

- good slide properties even at higher temperatures
- high wear resistance even at higher temperatures
- good heat ageing resistance
- high impact strength/creep resistance
- economical alternative to fluoroplastics for higher temperature ranges
- physiologically safe

Murylon® HT was developed on the basis of Murylon®, a proven material, then modified with heat stabilizing substances. It is therefore primarily used in the higher temperature ranges and can tolerate continuous operating temperatures right up to +155 °C. For applications in this temperature range, Murylon® HT is the most economical alternative of all high-performance materials.

Slide and wear properties
At temperatures above 70 °C, Murylon® HT offers far better slide and wear properties than the standard Murylon® range. Its good slide properties also significantly reduce the driving power requirements at your plant.

Heat ageing resistance
Murylon® HT offers good heat ageing resistance even in the upper temperature range, allowing its use even at high temperatures without any significant reduction in its qualities.

Impact strength/creep resistance
Murylon® HT can be used without costly additional protection in applications subject to impact and shock stresses. Among its many other advantages are noise reduction and shock absorption. Its creep resistance also enables it to tolerate compressive stress at high temperatures.

Contact with food
Murylon® is not approved for direct contact with food but is physiologically safe.

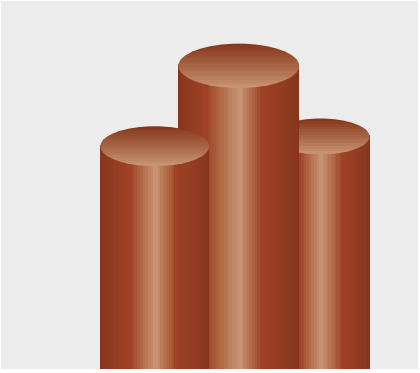

Semi-finished product range

Murylon® HT

Sheets/plates, mm, extruded

Thickness	Width	Length
10–40	610	2000
50	500	2000

Tolerances, mm

Thickness/Width/Length
to DIN16986

Round bars, mm, extruded

Diameter	Length
10–60	1000

Tolerances, mm

Diameter/Length
to DIN16980

Discs, mm

on request

Colour

Murylon® HT is supplied in this shade:

reddish brown

Semi-finished products cut to size

Do you need sheets/plates or round bars cut to size? We can meet your individual demands fast. A broad range of sizes in semi-finished products is also available ex-stock (see pp 17–20). Special sizes and colours on request.

Finished products custom made

Do you need custom-made guide segments, slide rails, rollers, milled parts etc? We can fabricate and supply finished parts to your individual specification or drawings, even in very small quantities. We will be pleased to prepare a quote for you, free of charge and without obligation, of course.

Murylon® HT

Characteristic Values		**Murylon® HT**	**Units**	**Test method DIN**	**Test method ISO/(IEC)**
Colour of material		reddish brown	–	–	–
Density		1.18	kg/dm³	53479	1183
Moisture absorption:					
– when saturated in standard atmosphere of +23 °C/50 % rel. humidity		2.8	%	–	–
– when saturated in water		9.5	%	–	–
Mechanical Characteristics					
Yield stress/breaking stress	+	100/–	N/mm²	53455	527
	++	55/–			
Modulus of elasticity (tensile test)	+	3300	N/mm²	53457	527
	++	1300			
Notched bar impact strength (Charpy)	+	8	kJ/m²	53453	179
Ball impression hardness	+	165	N/mm²	53456	2039–1
Shore hardness D	+	80	°	53505	–
Sliding friction coefficient (dry)	+	0.34	–	–	–
Thermal Characteristics					
Average thermal expansion coefficient α:					
– between +23 and 100 °C		9×10^{-5}	m/(m x K)	–	–
Thermal conductivity at +23 °C		0.30	W/(K x m)	52612	–
Max. operating temperature (continuous, in air)		+155	°C	–	–
Min. operating temperature		–40	°C	–	–
Electrical Characteristics					
Dielectric strength	+	25	kV/mm	53481	(243)
	++	15			
Volume resistivity	+	$>10^{14}$	Ω x cm	53482	(93)
	++	$>10^{12}$			
Surface resistance	+	$>10^{13}$	Ω	53482	(93)
	++	$>10^{12}$			

Legend:
+ values for dry material
++ values for material stored at standard atmosphere of +23 °C/50 % rel. humidity

All technical values are quoted without obligation.
For further details, please contact our Technical Department.

Murinyl®

white

Characteristics at a glance

- higher mechanical strength than PTFE
- good hydrolysis resistance
- high upper limit of operating temperature
- sterilisation resistant
- high chemical resistance
- very good UV and weathering resistance
- no moisture absorption
- approved for contact with food

Murinyl® is one of the fluoroplastics and shows excellent chemical and hydrolysis resistance even at higher temperatures up to +150 °C. Compared to other fluoroplastics, it also offers the best mechanical properties as well as good wear resistance.

Strength
In addition to good abrasion resistance, Murinyl® also shows good rigidity, toughness and compressive strength, making it a universal material for component design.

Resistance
In addition to its excellent chemical resistance, Murinyl® is also hydrolysis and sterilisation resistant and can be used at high operating temperatures. Its sterilisation resistance in particular makes it suitable for food and medical applications. Both indoor or outdoor applications subject to UV exposure show only insignificant long-term changes to its properties. Loads subject to chemical influences do not cause stress corrosion.

Suitable for use in wet operating conditions
Murinyl® absorbs virtually no moisture and is therefore dimensionally stable. Its material characteristics remain constant even in wet operating conditions, obviating downtimes and breakdowns at your plant.

Contact with food
Murinyl® is approved for direct contact with food (EU directive and FDA) and is physiologically safe.

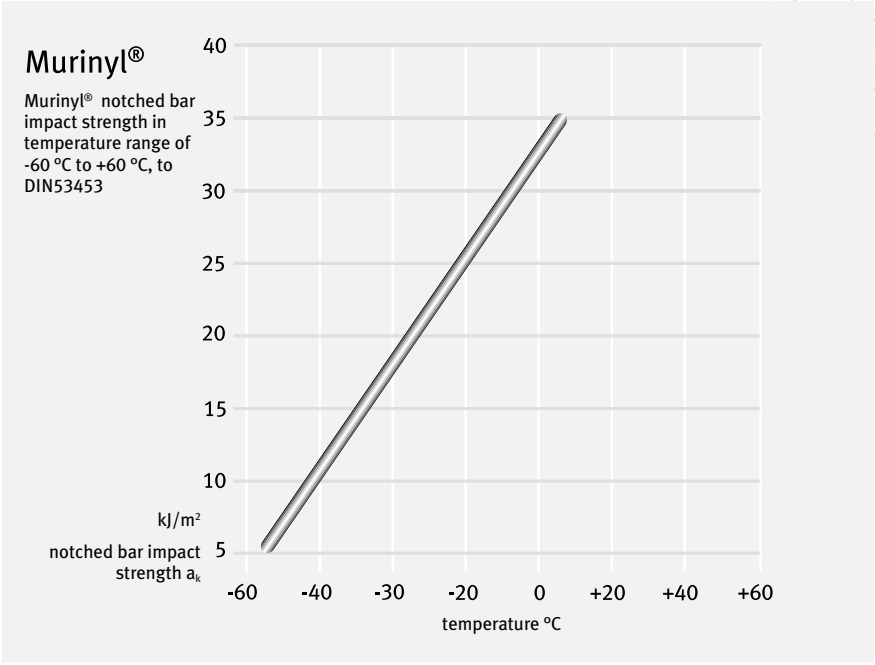

Semi-finished product range

Murinyl®

Sheets/plates, mm, extruded

Thickness	Width	Length
10–80	610	2000

Tolerances, mm

Thickness/Width/Length

to DIN16986

Round bars, mm, extruded

Diameter	Length
10–200	1000

Tolerances, mm

Diameter/Length

to DIN16980

Discs, mm

on request

Colour

Murinyl® is supplied in this shade:

white

Semi-finished products cut to size

Do you need sheets/plates or round bars cut to size? We can meet your individual demands fast. A broad range of sizes in semi-finished products is also available ex-stock (see pp 17–20). Special sizes and colours on request.

Finished products custom made

Do you need custom-made guide segments, slide rails, rollers, milled parts etc? We can fabricate and supply finished parts to your individual specification or drawings, even in very small quantities. We will be pleased to prepare a quote for you, free of charge and without obligation, of course.

Murtfeldt **E-mail** info@murtfeldt.de

Murinyl®

Characteristic Values	**Murinyl®**	**Units**	**Test method DIN**	**Test method ISO/(IEC)**
Colour of material	white	–	–	–
Density	1.79	kg/dm³	53479	1183
Moisture absorption:				
– when saturated in standard atmosphere of +23 °C/50 % rel. humidity	0.05	%	–	–
– when saturated in water	0.05	%	–	–
Mechanical Characteristics				
Yield stress/breaking stress	50/–	N/mm²	53455	527
Modulus of elasticity (tensile test)	2300	N/mm²	53457	527
Notched bar impact strength (Charpy)	10	kJ/m²	53453	179
Ball impression hardness	110	N/mm²	53456	2039–1
Shore hardness D	78	°	53505	–
Sliding friction coefficient (dry)	0.35	–	–	–
Thermal Characteristics				
Average thermal expansion coefficient α:				
– between +23 and 150 °C	14.5×10^{-5}	m/(m x K)	–	–
Thermal conductivity at +23 °C	0.19	W/(K x m)	52612	–
Max. operating temperature (continuous, in air)	+150	°C	–	–
Min. operating temperature	–50	°C	–	–
Electrical Characteristics				
Dielectric strength	18	kV/mm	53481	(243)
Volume resistivity	10^{15}	Ω x cm	53482	(93)
Surface resistance	10^{16}	Ω	53482	(93)

All technical values are quoted without obligation.
For further details, please contact our Technical Department.

Murflor®/Murflor®+ carbon/Murflor®+ bronze

white, black, bronze

Characteristics at a glance

- excellent impact strength even at low temperatures
- very good slide properties
- low stick-slip effect
- good anti-adhesion properties
- high continuous operating temperature
- very good chemical resistance
- hydrolysis and superheated steam resistant
- very good UV resistance
- low flammability to UL94
- electrically insulating or antistatic, subject to type of material
- approved for contact with food, subject to type of material

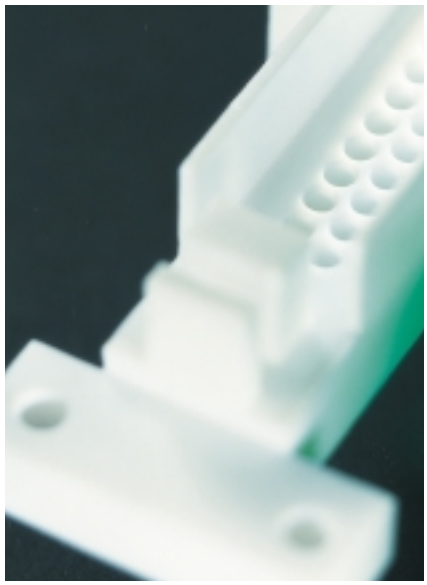

Die Murflor®materials are suitable for applications demanding excellent chemical, hydrolysis and superheated steam resistance combined with acceptable tribological properties.

Slide properties
At both high and low temperatures, Murflor® materials show a very low coefficient of sliding friction, a low stick-slip effect and good anti-adhesion properties. Together with Material "S"® 8000, they have the lowest sliding friction coefficient of all technical and high-performance materials. These properties reduce the driving power required and thus energy consumption. However, Murflor®'s wear resistance is relatively low.

Impact strength
Even at extremely low temperatures, Murflor® materials can be used in applications subject to impact and shock stresses without costly additional protection. Among its many other advantages are noise reduction and shock absorption.

Creep and wear resistance
Adding 25% carbon or 60% bronze to the basic Murflor® material optimizes its hardness, compressive strength and creep as well as wear resistance. Murflor® + carbon, being an anti-static sliding material, is used for belt guides with speeds of more than 1 m/s where Original Material "S"® black antistatic is no longer suitable. Murflor® + bronze has a lower expansion coefficient and good thermal conductivity. It, too, is antistatic.

Resistance
Murflor® is the material most resistant to most organic and anorganic chemicals. In addition, neither indoor nor outdoor applications subject to UV exposure affect its properties, so maintenance intervals otherwise required due to corrosion, are reduced. Neither is there a need for corrosion-proof steel. Due to the addition of bronze, Murflor® + bronze may show some discolouration which does not however affect its characteristics.

Continuous operating temperature
Very few thermoplastics exceed the thermal stability of Murflor® materials. The continuous operating temperature starts at -200 °C and, allowing for a reduction in their mechanical properties, can go up to +260 °C. Their low flammability to UL94 further increases the safety of your plant at high operating temperatures.

Contact with food
Murflor® is approved for direct contact with food and is physiologically safe.
Murflor®+ bronze and Murflor®+ carbon are not approved for direct contact with food but are physiologically safe.

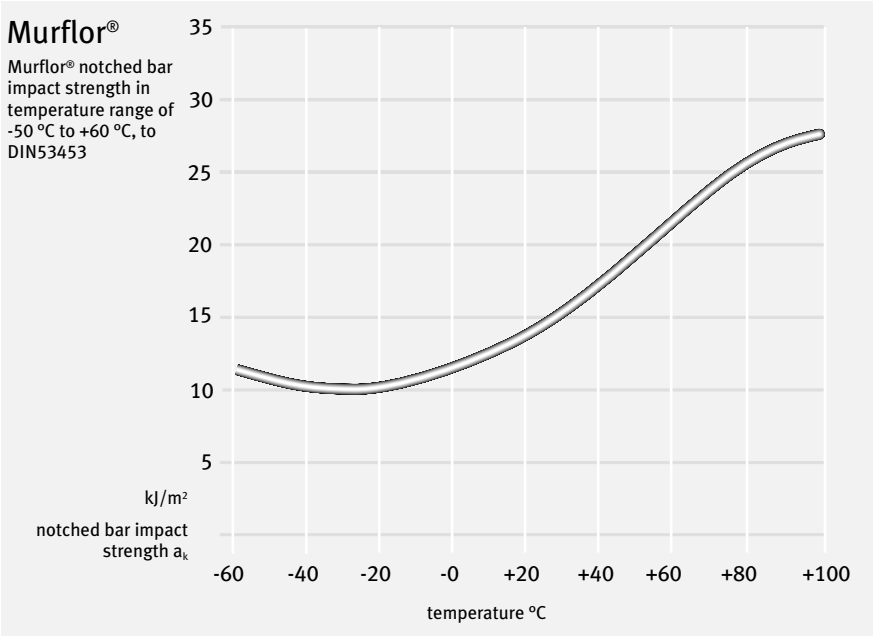

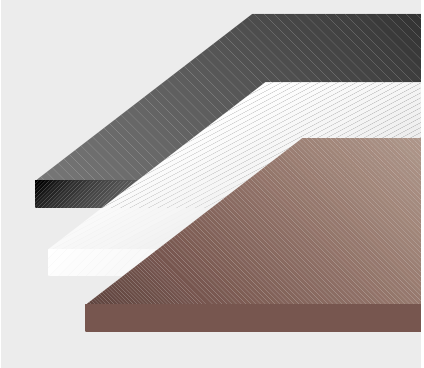

Semi-finished product range

Murflor®

Sheets/plates, mm, compression moulded

Thickness	Width	Length
3–50	1000	1000
10–20	500	2000

Tolerances, mm

Thickness/Width/Length
≥ + 0

Round bars, mm, extruded

Diameter	Length
10–120	1000

Tolerances, mm

Diameter/Length
≥ + 0

Discs, mm

on request

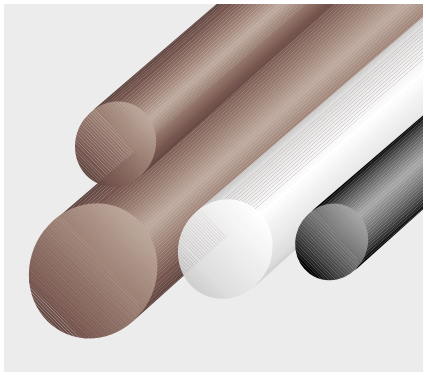

Semi-finished product range

Murflor®+carbon/Murflor®+bronze

Sheets/plates, mm, compression moulded

Thickness	Width	Length
10–40	1000	1000

Tolerances, mm

Thickness/Width/Length
≥ + 0

Round bars, mm extruded

Diameter	Length
10–100	on request

Tolerances, mm

Diameter/Length
≥ + 0

Discs, mm

on request

Colours
Murflor®, Murflor®+bronze and Murflor®+carbon are supplied in three shades:

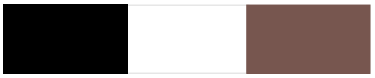

black, white, bronze

Semi-finished products cut to size
Do you need sheets/plates or round bars cut to size? We can meet your individual demands fast. A broad range of sizes in semi-finished products is also available ex-stock (see pp 17–20). Special sizes and colours on request.

Finished products custom made
Do you need custom-made guide segments, slide rails, rollers, milled parts etc? We can fabricate and supply finished parts to your individual specification or drawings, even in very small quantities. We will be pleased to prepare a quote for you, free of charge and without obligation, of course.

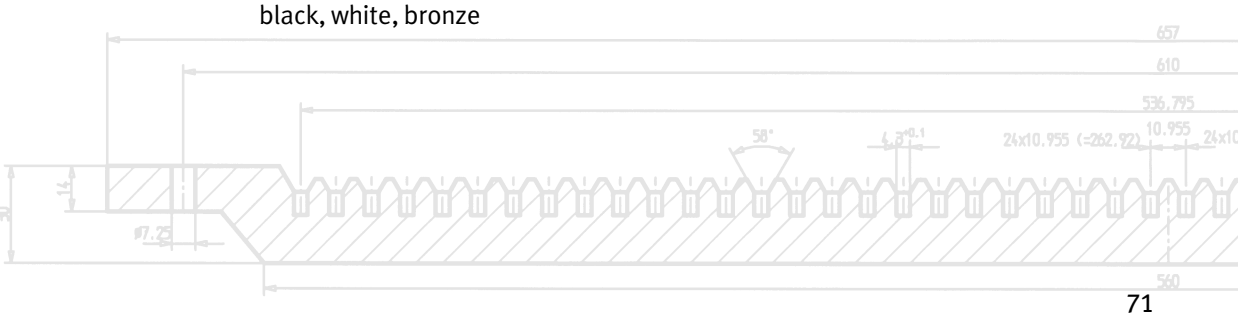

Murflor® /Murflor®+carbon/Murflor®+bronze

Characteristic Values	**Murflor®**	**Murflor® +carbon 25%**	**Murflor® +bronze 60%**	**Units**	**Test method DIN**	**Test method ISO/(IEC)**
Colour of material	white	black	bronze	–	–	–
Density	2.18	2.12	3.74	kg/dm³	53479	1183
Moisture absorption:						
– when saturated in standard atmosphere of +23°C/50% rel. humidity	–	–	–	%	–	–
– when saturated in water	–	–	–	%	–	–
Mechanical Characteristics						
Yield stress/breaking stress	18/–	15/–	14/–	N/mm²	53455	527
Modulus of elasticity (tensile test)	750	–	–	N/mm²	53457	527
Notched bar impact strength (Charpy)	16	8	11	kJ/m²	53453	179
Ball impression hardness	22	37	37	N/mm²	53456	2039–1
Shore hardness D	58	67	68	°	53505	–
Sliding friction coefficient (dry)	0.08	0.12	0.14	–	–	–
Thermal Characteristics						
Average thermal expansion coefficient α:						
– betweeen +23 and 150 °C	19.5×10^{-5}	10.7×10^{-5}	9.7×10^{-5}	m/(m x K)	–	–
Thermal conductivity at +23 °C	0.23	0.7	0.7	W/(K x m)	52612	–
Max. operating temperature (continuous, in air)	+260	+260	+260	°C	–	–
Min. operating temperature	–200	–200	–200	°C	–	–
Electrical Characteristics						
Dielectric strength	20	–	–	kV/mm	53481	(243)
Volume resistivity	10^{18}	10^{3}	10^{8}	Ω x cm	53482	(93)
Surface resistance	10^{17}	10^{3}	10^{8}	Ω	53482	(93)

All technical values are quoted without obligation.
For further details, please contact our Technical Department.

Murdotec® SP

dark blue

Characteristics at a glance

- excellent creep resistance and high compressive strength
- high endurance due to good slide properties and high wear resistance
- tolerates continuous operating temperature of up to +220 °C under load
- good chemical and hydrolysis resistance
- good UV resistance
- low thermal expansion coefficient
- physiologically safe

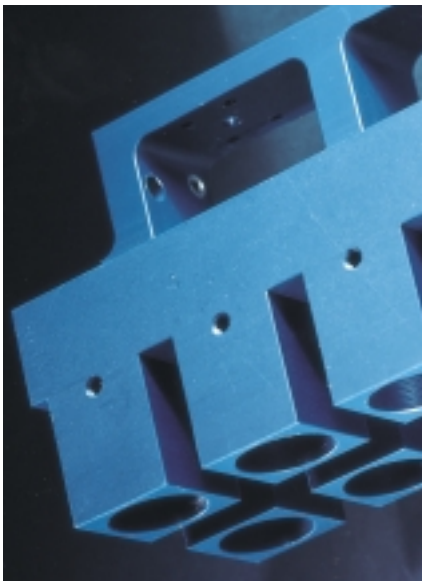

Murdotec® SP is a thermoplastic material modified with fibres and solid lubricants.
It offers very good dimensional stability as well as extremely high wear resistance right up into the high temperature range.

Very good dimensional stability
The addition of fibres ensures that Murdotec® SP is dimensionally stable even at high temperatures while the solid lubricants bonded-in make it eminently suitable for applications demanding good slide properties and high wear resistance.

Good electrical insulation properties
Murdotec® SP has good electrical insulation properties not affected either by its minimal moisture absorption nor by higher temperatures.

Continuous operating temperature (+ 220 °C) under load
Murdotec® SP tolerates a continuous operating temperature of up to +220 °C under load. Even in this range, the material shows high endurance, so reducing your maintenance intervals. In addition, its good UV resistance allows its use in outdoor applications.

Coefficient of linear expansion
Its low coefficient of thermal expansion ensures Murdotec® SP's trouble-free use in applications with high and varying temperatures.

Contact with food
Murdotec® SP is not approved for direct contact with food but is physiologically safe.

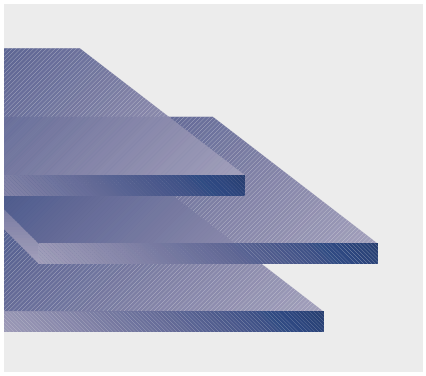

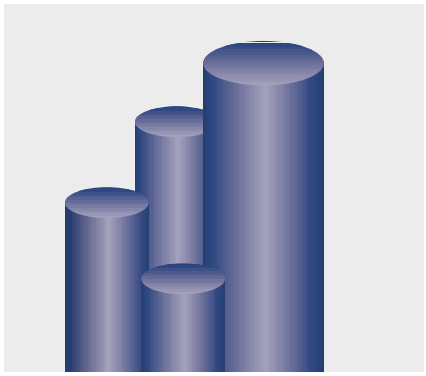

Semi-finished product range

Murdotec® SP

Sheets/plates, mm, extruded

Thickness	Width	Length
8–50	625	2000

Tolerances, mm

Thickness/Width/Length
to DIN16986

Round bars, mm, extruded

Diameter	Length
10–100	1000

Tolerances, mm

Diameter/Length
to DIN16980

Discs, mm

on request

Colour

Murdotec® SP is supplied in this shade:

dark blue

Semi-finished products cut to size

Do you need sheets/plates or round bars cut to size? We can meet your individual demands fast. A broad range of sizes in semi-finished products is also available ex-stock (see pp 17–20). Special sizes and colours on request.

Finished products custom made

Do you need custom-made guide segments, slide rails, milled parts etc? We can fabricate and supply finished parts to your individual specification or drawings, even in very small quantities. We will be pleased to prepare a quote for you, free of charge and without obligation, of course.

Murdotec® SP

Characteristic Values		**Murdotec® SP**	**Units**	**Test method DIN**	**Test method ISO/(IEC)**
Colour of material		dark blue	–	–	–
Density		1.43	kg/dm³	53479	1183
Moisture absorption:					
– when saturated in standard atmosphere of +23 °C/50 % rel. humidity		0.03	%	–	–
– when saturated in water		0.09	%	–	–
Mechanical Characteristics					
Yield stress/breaking stress		–/75	N/mm²	53455	527
Modulus of elasticity (tensile test)		3700	N/mm²	53457	527
Notched bar impact strength (Charpy)		3.5	kJ/m²	53453	179
Ball impression hardness		180	N/mm²	53456	2039–1
Shore hardness D		81	°	53505	–
Sliding friction coefficient (dry)		0.20	–	–	–
Thermal Characteristics					
Average thermal expansion coefficient α:					
– between +23 and 150 °C		6×10^{-5}	m/(m x K)	–	–
Thermal conductivity at +23 °C		0.30	W/(K x m)	52612	–
Max. operating temperature (continuous, in air)		+220	°C	–	–
Min. operating temperature		–20	°C	–	–
Electrical Characteristics					
Dielectric strength	+	24	kV/mm	53481	(243)
Volume resistivity	+	10^{15}	Ω x cm	53482	(93)
Surface resistance	+	10^{15}	Ω	53482	(93)

Legend:
+ values for dry material

All technical values are quoted without obligation.
For further details, please contact our Technical Department.

Murpec® / Murpec® SP

beige/black

Characteristics at a glance

- high temperature resistance
- high abrasion resistance compared to other high-performance materials (Murpec® SP)
- low flammability
- good compressive strength
- good UV resistance
- excellent chemical and hydrolysis resistance
- Murpec® and Murpec® SP can cope where metals may not
- costly surface protection against chemicals is not necessary
- low expansion coefficient
- approved for contact with food (Murpec®)

Murpec® and Murpec® SP are especially suitable for applications where, under long-term static loads and high temperatures, no permanent deformations are permissible.

A modified version of the basic material, Murpec® SP offers significantly improved wear resistance, together with excellent slide properties as well as good mechanical qualities. Both Murpec® and Murpec® SP also show high chemical resistance.

Exceptional fatigue resistance
Murpec® and Murpec® SP offer high fatigue resistance, leading to long life under cyclic loads.

High chemical resistance
Their good chemical resistance allows direct contact with many substances without surface protection or high-alloy metals. They are also extremely resistant to hydrolysis and superheated steam.

High temperature resistance
Even at high temperatures, their electrical resistance values, rigidity and strength remain virtually constant. In long-term applications, especially under constant load and subject to high temperatures, they show reliable dimensional stability.

Coefficient of linear expansion
Compared with other thermoplastics, Murpec® and Murpec® SP have a very low thermal expansion coefficient (Murpec® SP's is similar to that of aluminium). That is also the reason for their optimal dimensional stability which shows no deformation even in wet operating conditions, making costly designs for plastic-metal combinations in high-temperature environments unnecessary.

Contact with food
Murpec® is approved for direct contact with food (EU directives and FDA) and is physiologically safe.
Murpec® SP is not approved for direct contact with food but is physiologically safe.

Semi-finished product range

Sheets/plates, mm, extruded
Murpec®

Thickness	Width	Length
5–25	500	1000
30–60	615	1000

Murpec® SP

Thickness	Width	Length
5– 8	525	1000
10–50	625	1000

Tolerances, mm

Thickness/Width/Length
to DIN16986

Round bars, mm, extruded
Murpec®

Diameter	Length
4–200	1000

Murpec® SP

Diameter	Length
6–100	1000

Tolerances, mm

Diameter/Length
to DIN16980

Discs, mm
Murpec® /Murpec® SP

on request

Colours
Murpec® and Murpec® SP are supplied in these shades:

beige, black

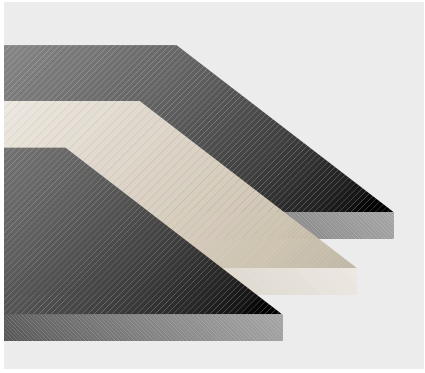

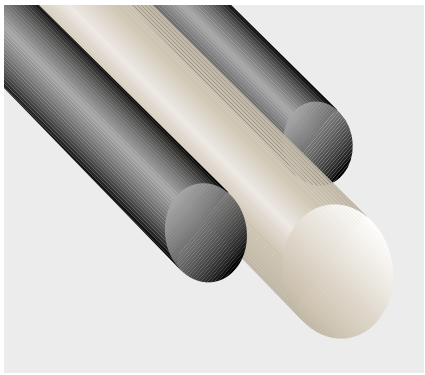

Semi-finished products cut to size
Do you need sheets/plates or round bars cut to size? We can meet your individual demands fast. A broad range of sizes in semi-finished products is also available ex-stock (see pp 17–20). Special sizes and colours on request.

Finished products custom made
Do you need custom-made guide segments, slide rails, milled parts etc? We can fabricate and supply finished parts to your individual specification or drawings, even in very small quantities. We will be pleased to prepare a quote for you, free of charge and without obligation, of course.

Murpec®/Murpec® SP

Characteristic Values		**Murpec®**	**Murpec® SP**	**Units**	**Test method DIN**	**Test method ISO/(IEC)**
Colour of material		beige	black	–	–	–
Density		1.31	1.45	kg/dm³	53479	1183
Moisture absorption:						
– when saturated in standard atmosphere of +23 °C/50 % rel. humidity		0.2	0.14	%	–	–
– when saturated in water		0.45	0.3	%	–	–
Mechanical Characteristics						
Yield stress/breaking stress		110/–	–/75	N/mm²	53455	527
Modulus of elasticity (tensile test)		4400	5900	N/mm²	53457	527
Notched bar impact strength (Charpy)		3.5	2.5	kJ/m²	53453	179
Ball impression hardness		230	215	N/mm²	53456	2039–1
Shore hardness D		87	87	°	53505	–
Sliding friction coefficient (dry)		0.20	0.15	–	–	–
Thermal Characteristics						
Average thermal expansion coefficient α:						
– between +23 and 150 °C		5×10^{-5}	3×10^{-5}	m/(m x K)	–	–
Thermal conductivity at +23 °C		0.25	0.24	W/(K x m)	52612	–
Max. operating temperature (continuous, in air)		+250	+250	°C	–	–
Min. operating temperature		–60	–30	°C	–	–
Electrical Characteristics						
Dielectric strength	+	24	–	kV/mm	53481	(243)
Volume resistivity	+	10^{16}	$< 10^{7}$	Ω x cm	53482	(93)
Surface resistance	+	10^{16}	$< 10^{7}$	Ω	53482	(93)

Legend:
+ values for dry material

All technical values are quoted without obligation.
For further details, please contact our Technical Department.

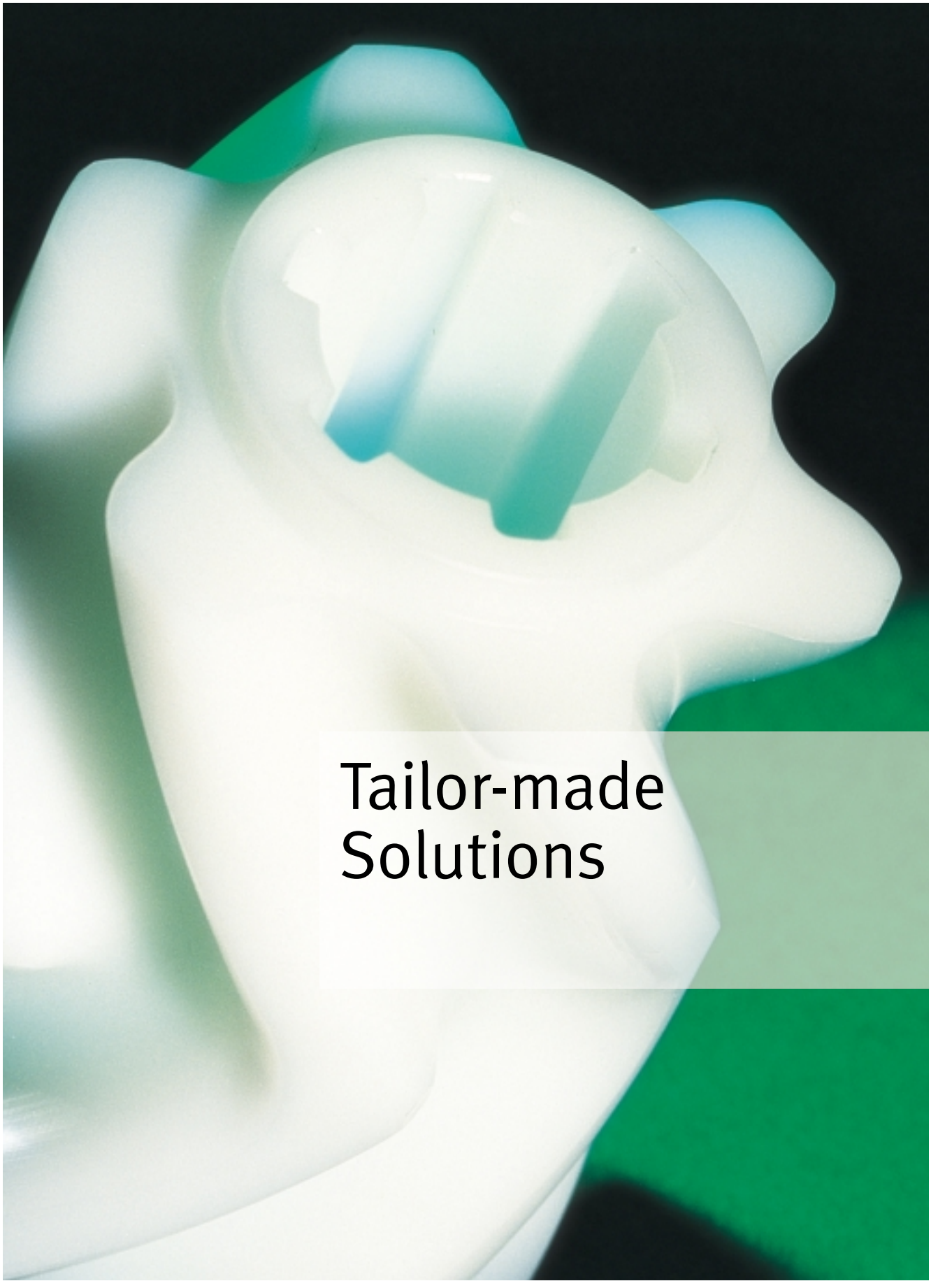

Tailor-made Solutions

Tailor-made Solutions

upgrade and update

Are you planning a new installation, or do you want to upgrade or update an existing one? Either way, Murtfeldt's experts can assist you in developing your very own tailor-made solution. Please contact our specialists as early as at the design stage. Whatever your branch of industry, we will work out the best solution in plastics for you.

Project development

1. First contact

You can get in touch with us by letter, fax, telephone or e-mail, whichever is most convenient for you. Should you prefer an on-site consultation, please let us know. Our application specialists in the field are available to you anytime – 12 within Germany and 35 worldwide.

Depending on the task, this is when the outlines of a potential solution might be suggested. Alternatively, a more in-depth consultation with application engineers at our Dortmund headquarters might be arranged. Either way, help and advice is never far away, wherever you are. Contact us for the representative nearest you or visit our homepage on www.murtfeldt.de.

3. Offer
Based on the solution we have jointly developed, we then prepare a quotation for you, free of charge and without obligation.

4. Order confirmation
Once you have placed your order, we issue a clear and detailed confirmation, committing ourselves not only to the performance parameters agreed, such as materials and machining qualities, but also to highly competitive delivery times.

2. Development
Our application engineers offer advice on all aspects of materials selection as well as support with your design drawings, based on their comprehensive know-how. That way, your designs are assured of being both industry and material-specific from the start. The target data established at the development stage are stored at the database of our Dortmund headquarters and thus available for retrieval should you decide to place an order.

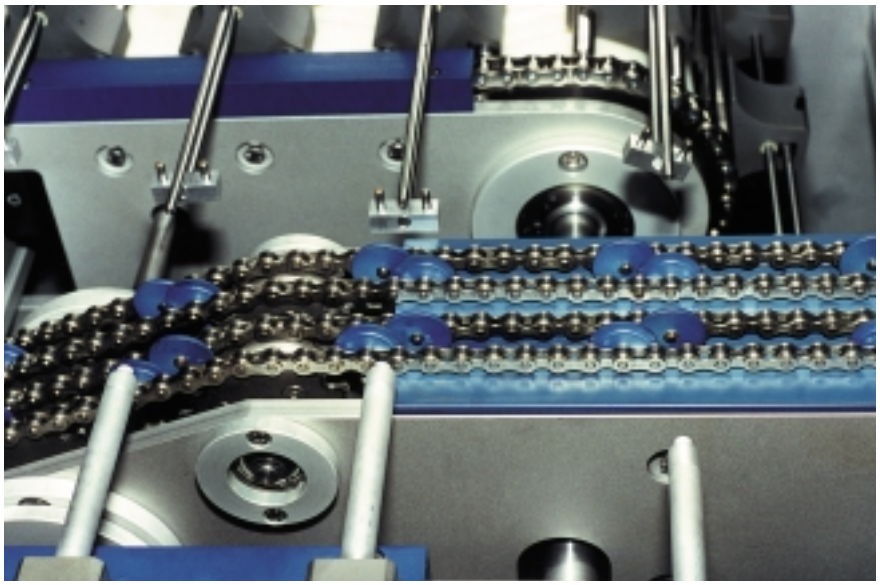

Packaging plant with chain guides
made from Murdotec® SP

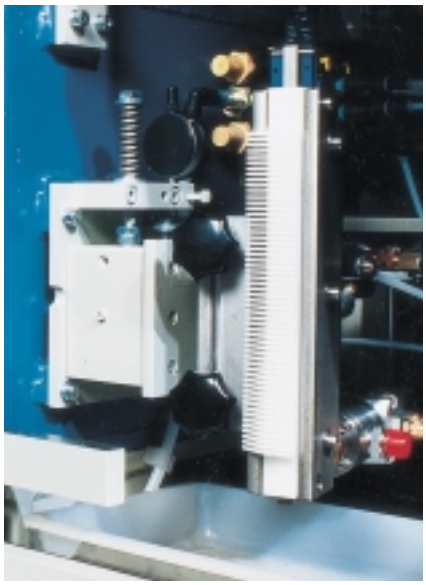

Glue spreader for wooden joints,
made from Murytal® C natural

5. Manufacture

Your order is slotted into our production schedule in line with the performance parameters agreed. CAD and CNC systems enable our modern, economical manufacturing process to respond fast and flexibly to your requirements. Your design drawings can easily be transferred from your own CAD system to ours via one of a range of different file formats such as DXF.

CAD image of pump casing made from Original Material "S"® green

6. Machining
Our machining processes include:

sawing
planing
drilling
form milling
milling / turning
CNC / NC milling / turning
CNC five-centre milling
vibratory grinding
welding
annealing
own tool production

sawing

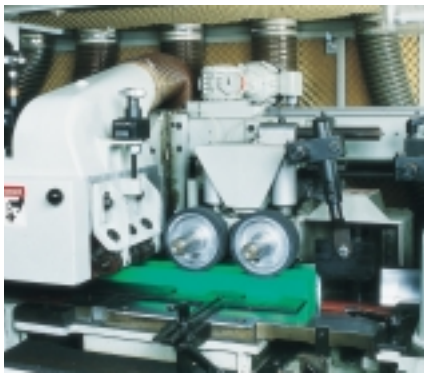
form milling

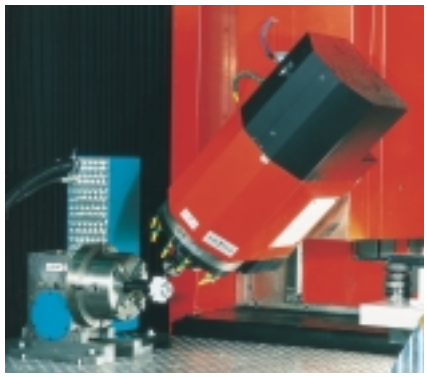
CNC milling/NC milling

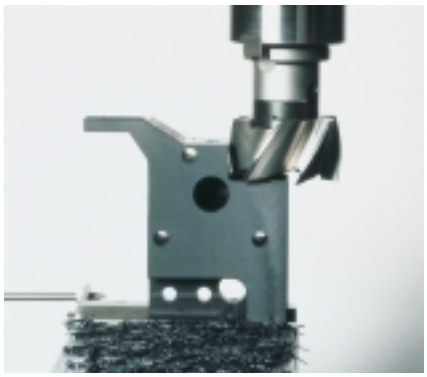
milling/turning

CNC five-centre milling

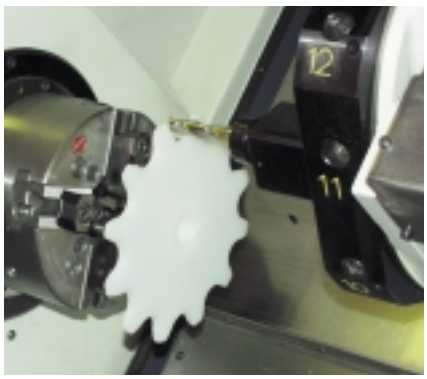

CNC turning

7. Quality Assurance
From order acceptance through to despatch, we subject each processing stage to continuous quality control. In view of the critical importance we place on the management of quality control, our company was awarded a DIN EN ISO 9001 certificate in 1994. For our clients, that means the assurance of reliable and consistently high quality.

Containers for filling plant, made from Original Material "S"®

Guide tongues made from Original Material "S"®

Expert despatch

8. Industry-specific packaging and despatch
It goes without saying that industry-specific, on-time despatch to your company or your nominated installation site is part of our overall quality control. From expert consultation via advanced production to on-time delivery, and not least thanks to an on-going dialogue between research and application, Murtfeldt stands for quality in materials, machining and service.

Bottling plant with discs, star wheels and worm screw made from Original Material "S"® black antistatic

9. Environment

In 1997 we were awarded the DIN EN ISO 14001 certificate incorporating the EU eco-management and audit scheme for our rigorous environmental management. In a closed loop system, 90% of our production residue and packaging get recycled. For us at Murtfeldt, reliability plus consistent production and environmental quality are of critical importance.

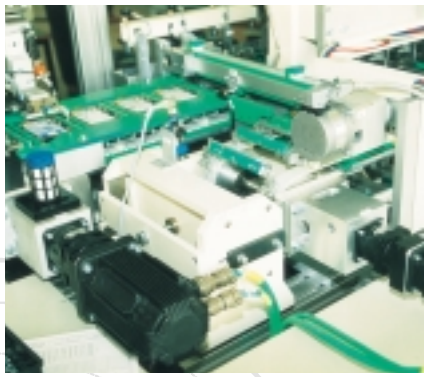

Plant manufacturing

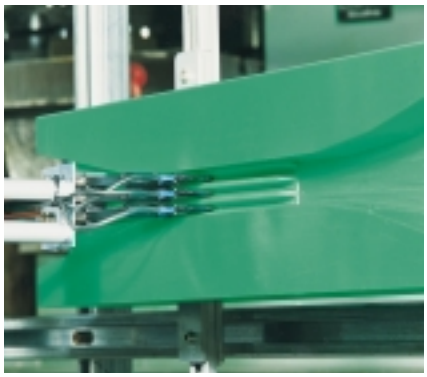

Inlet gate made from Original Material "S"®

Ø12.5
30°
30°
Ø75.5
Ø55+0.2 +0.1
15°
24X15°=360°

15
45
R69
R35
A

445
R15
30
30
50
50

Standard Product Range

Fast delivery thanks to large range of standard products

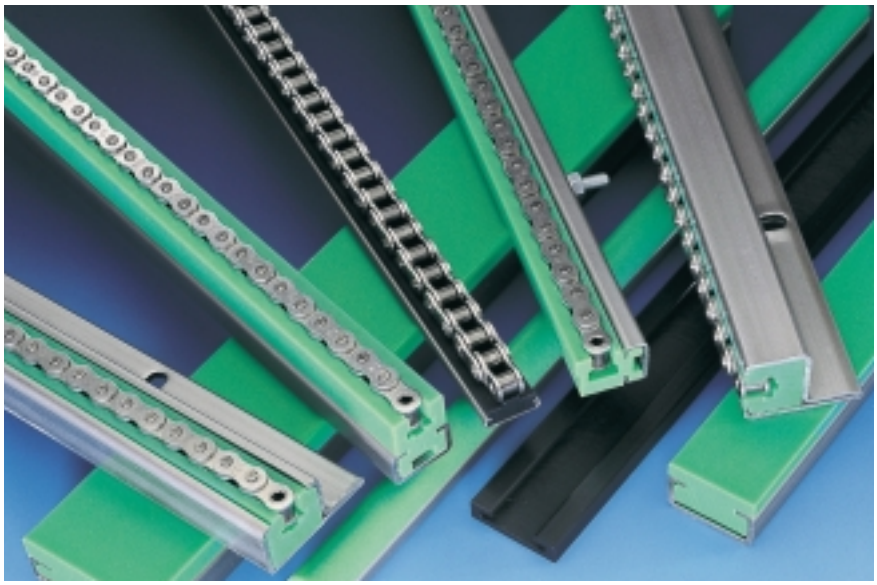

Our large range of standard products means fast delivery to you. Their immediate availability makes your project run better and ensures that your order is processed on time – a good start for meeting your clients' demands.

- chain/belt guides
- chain/belt tensioners
- cam guides
- guide rails
- tapes and profiles
- chain wheels/rollers
- chain racks
- lubrication systems

Chain Guides

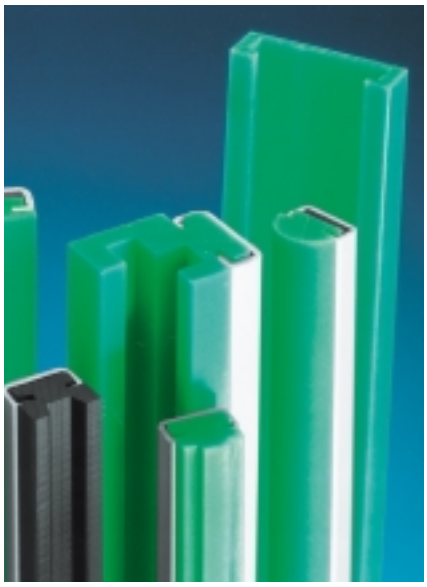

Metal guide and support profiles lead to heavy wear on chains.

In order to reduce that wear as well as frictional resistance and noise levels, they have to be lubricated at regular intervals.

That is why Murtfeldt developed highly wear resistant guides made from plastics for roller and round link chains.

Today, we offer a large variety of chain guide systems for every application. Both our Original Material "S"® and Material "S"1000® are ideally suited for guides of roller and round link chains, thus obviating additional lubrication, reducing the driving power required and resulting in long, maintenance-free life.

- high abrasion resistance
- low coefficient of sliding friction
- self-lubricating (no need for any oil lubrication)
- extremely high impact and breaking strengths at low temperatures, down to – 250 °C
- high chemical resistance
- vibration dampening
- no moisture absorption
- no corrosion
- approved for direct contact with food (EU directives and FDA)

Our comprehensive range of guides for roller chains to DIN8187 and round link chains to DIN766 and DIN764 is available ex stock. For further details, please see the following pages.
All our chain guides are also available ex stock in Material "S"1000®, a more economical alternative.

Our modern equipment and machinery allow low-cost production, even in very small runs, of special guides to your specification.

Please see pg 136 of this catalogue for information on designing your own guides.

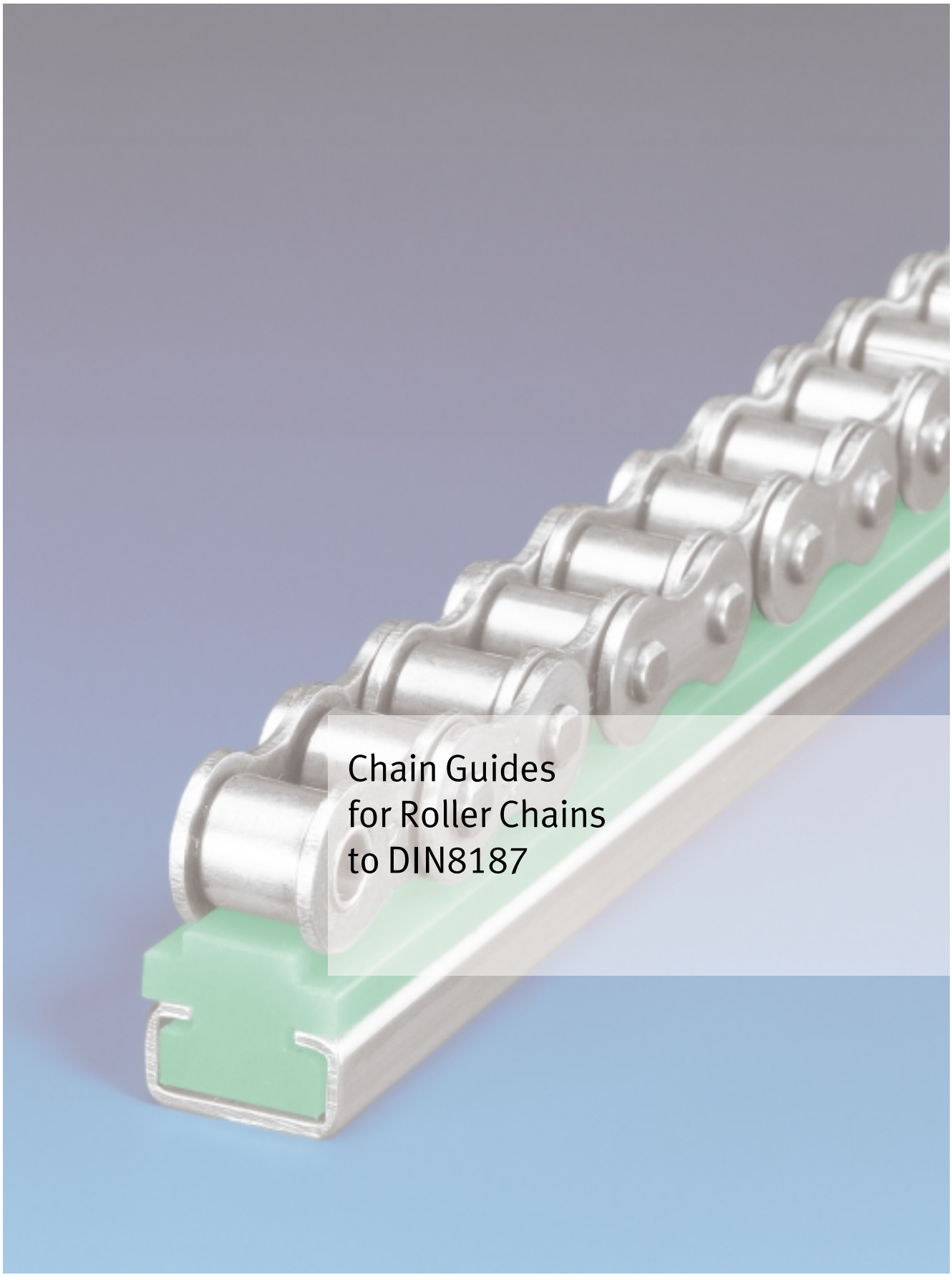

Chain Guides for Roller Chains to DIN8187

Chain Guides for Roller Chains

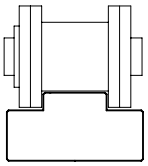

Type T
on pg 94

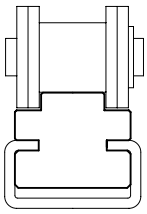

Type CT
on pg 95

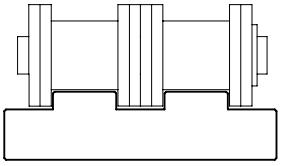

Type Double-T
on pg 96

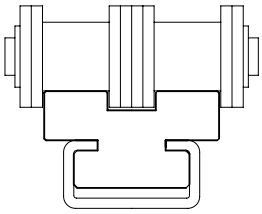

Type Double-CT
on pg 97

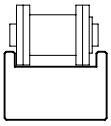

Type TU
on pg 98

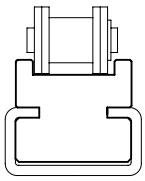

Type CTU
on pg 99

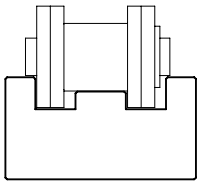

Type TS
on pg 100

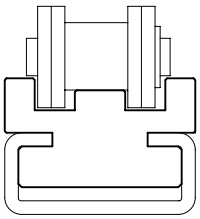

Type CTS
on pg 101

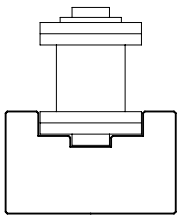

Type U
on pg 102

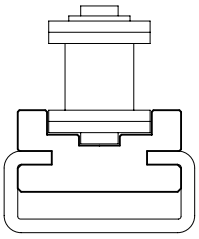

Type CU
on pg 103

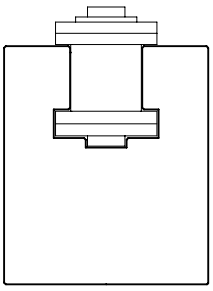

Type K
on pg 104

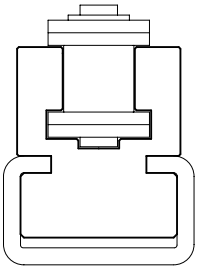

Type CK
on pg 105

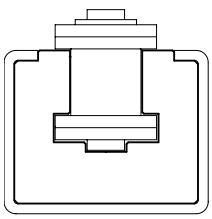

Type CKG
on pg 106

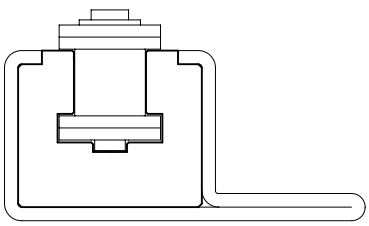

Type CKG 15 V
on pg 107

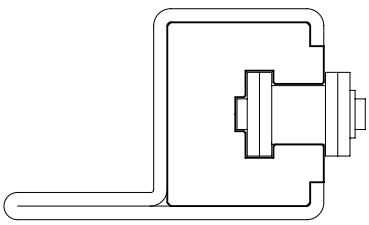

Type CKG 14 H
on pg 108

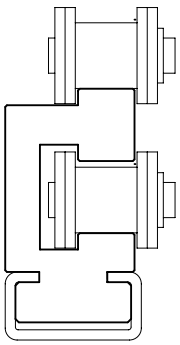

Type ETA
on pg 109

Guides for Roller Chains

Our standard range of guides for roller chains comprises 16 different designs in two materials at your option: high-quality Original Material "S"® green and lower-cost Material "S" 1000® green.

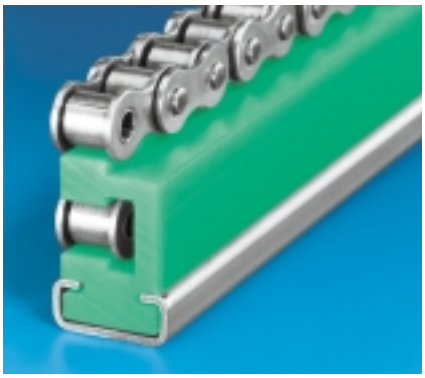

Material "S"1000® is exclusively produced from ultra-macromolecular polyethylene. Its hi-tech manufacturing process mixes pure ultra-macromolecular polyethylene powder with ground Original Material "S"®. Under both high pressure and high temperature, this finely ground powder is then pressed into new semi-finished products. The result is a high-quality type of material impressive for its high abrasion resistance, good slide qualities and a very positive price-performance ratio.

Original Material "S"® is produced on the basis of a pure ultra-macromolecular, low-pressure polyethylene.

Its raw materials to DIN16783 and its manufacturing process – continuously optimized over more than 40 years by now – of sintering under pressure ensure that Original Material "S"® retains the qualities which first opened up such a vast array of applications in mechanical engineering.

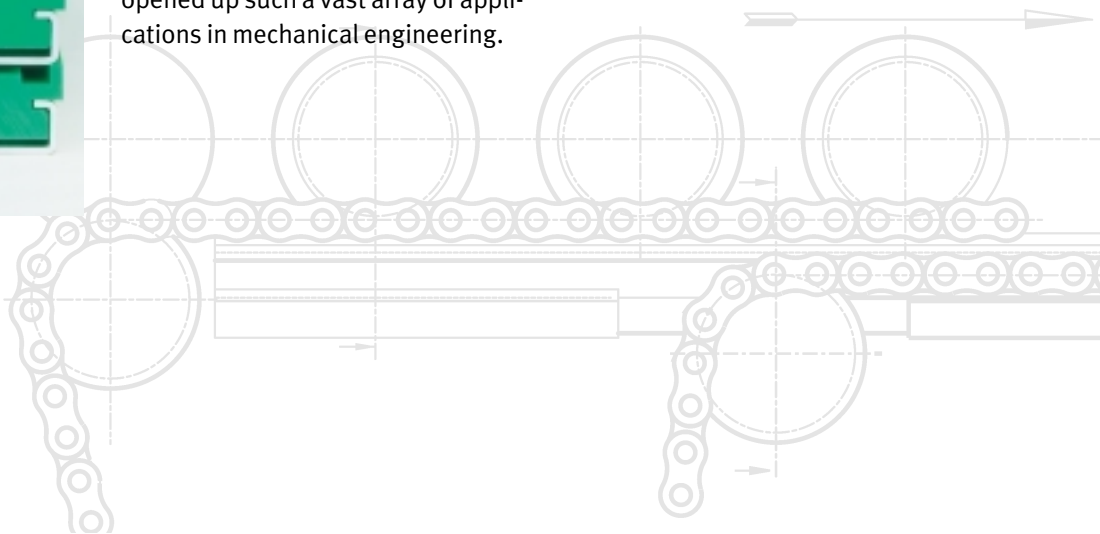

Type T (Original Material "S"® green)

Chain Guides for Roller Chains to DIN8187

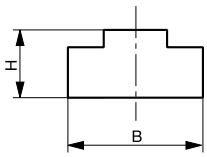

Chain size in inches	Chain size DIN8187	B mm	H mm	Weight kg/m	Length (tolerance +0/+7) mm	Part no.	Availability
3/8" x 7/32"	06B-1	15	10	0.13	2000	221 010 002	●
1/2" x 3/16"	083-1	15	10	0.13	2000	221 010 003	●
1/2" x 1/4"	085-1	20	10	0.16	2000	221 010 004	○
1/2" x 5/16"	08B-1	20	10	0.18	2000	221 010 005	●
1/2" x 5/16"	08B-1	20	15	0.26	2000	221 010 006	●
1/2" x 5/16"	08B-1	20	20	0.34	2000	221 010 007	●
1/2" x 5/16"	08B-1	20	30	0.55	2000	221 010 008	●
5/8" x 1/4"	–	20	10	0.16	2000	221 010 009	○
5/8" x 3/8"	10B-1	20	10	0.16	2000	221 010 010	●
5/8" x 3/8"	10B-1	20	15	0.25	2000	221 010 011	●
5/8" x 3/8"	10B-1	20	20	0.36	2000	221 010 012	○
5/8" x 3/8"	10B-1	20	30	0.55	2000	221 010 013	○
3/4" x 7/16"	12B-1	25	10	0.20	2000	221 010 014	●
3/4" x 7/16"	12B-1	25	15	0.32	2000	221 010 015	●
3/4" x 7/16"	12B-1	25	20	0.43	2000	221 010 016	●
3/4" x 7/16"	12B-1	25	30	0.69	2000	221 010 017	●
1" x 17mm	16B-1	40	15	0.45	2000	221 010 018	●
1" x 17mm	16B-1	40	20	0.68	2000	221 010 019	●
1" x 17mm	16B-1	40	30	1.05	2000	221 010 020	●
1 1/4" x 3/4"	20B-1	45	15	0.55	2000	221 010 021	●
1 1/2" x 1"	24B-1	60	15	0.68	2000	221 010 022	●
1 3/4" x 31mm	28B-1	75	20	1.15	2000	221 010 023	○
2" x 31mm	32B-1	80	20	1.17	2000	221 010 024	○

All chain guides are available in Original Material "S"® green or Material "S" 1000®.
Please order as follows:
Example:
Chain guide in Original Material "S"® green
Part no.: 221 010 002
Chain guide in Material "S" 1000® green
Part no.: 221 020 002

Special sizes/designs, other technical or high-performance materials on request.
Special profiles, see pp. 143–145.
Intermediate sizes available at short notice and charged at full meter prices. Tolerances at cross-section of profile to DIN2768, tolerance class m.
Properties of materials, see pg 14.

● ex stock
○ at short notice on request

Type CT (Original Material "S"® green)

Chain Guides with Steel C-Profile for Roller Chains to DIN8187

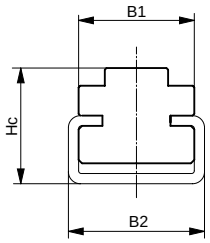

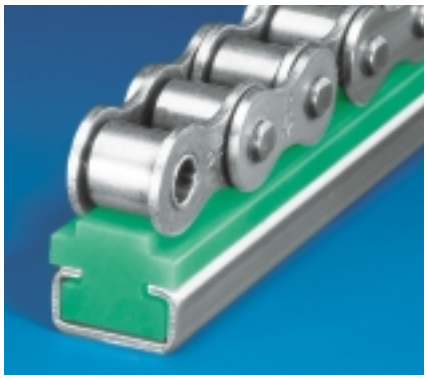

Chain size in inches	Chain size DIN8187	C-profile type	B_1 mm	B_2 mm	H_c mm	Weight kg/m	Length chain guide (tolerance +0/+7) mm	Length steel C-profile (tolerance +0/+40) mm	Part no.	Availability
3/8" x 7/32"	06B-1	C3	17	20	17	0.81	2000	2000 6000	221 210 215 221 210 315	○ ○
1/2" x 3/16"	083-1	C3	17	20	17	0.81	2000	2000 6000	221 210 202 221 210 302	○ ○
1/2" x 1/4"	085-1	C3	17	20	17	0.81	2000	2000 6000	221 210 203 221 210 303	○ ○
1/2" x 5/16"	08B-1	C1	20	24	11	0.43	2000	2000 6000	221 210 201 221 210 301	● ●
1/2" x 5/16"	08B-1	C3	17	20	17	0.81	2000	2000 6000	221 210 204 221 210 304	● ●
5/8" x 1/4"	–	C3	17	20	17	0.82	2000	2000 6000	221 210 205 221 210 305	○ ●
5/8" x 3/8"	10B-1	C3	17	20	17	0.82	2000	2000 6000	221 210 206 221 210 306	● ●
3/4" x 7/16"	12B-1	C3	20	20	17	0.83	2000	2000 6000	221 210 207 221 210 307	● ●
3/4" x 7/16"	12B-1	C5	24	28	18	1.22	2000	2000 6000	221 210 208 221 210 308	● ●
1" x 17mm	16B-1	C5	24	28	18	1.23	2000	2000 6000	221 210 209 221 210 309	● ●
1 1/4" x 3/4"	20B-1	C5	28	28	18	1.23	2000	2000 6000	221 210 210 221 210 310	● ●
1 1/2" x 1"	24B-1	C9	33	38	30	2.61	2000	2000 6000	221 210 211 221 210 311	○ ○
1 3/4" x 31mm	28B-1	C9	38	38	30	2.66	2000	2000 6000	221 210 212 221 210 312	○ ○
2" x 31mm	32B-1	C9	38	38	30	2.66	2000	2000 6000	221 210 213 221 210 313	○ ○
2" x 31mm	32B-1	C12	60	60	35	3.31	2000	2000 6000	221 210 214 221 210 314	○ ○

All chain guides are available in Original Material "S"® green or Material "S" 1000®.
Please order as follows:
Example:
Chain guide in Original Material "S"® green with steel C-profile, galvanized
Part no.: 221 210 215
Chain guide in Material "S" 1000® green with steel C-profile, galvanized
Part no.: 221 220 215

Special sizes/designs, other technical or high-performance materials on request.
Steel C-profile in stainless steel (V2A) also available ex stock.
Chain guides also available without steel C-profile.
Special profiles, see pp 143–145.
Intermediate sizes available at short notice and charged at full meter prices. Tolerances at cross-section of plastic profile to DIN2768, tolerance class m.

Tolerances and sizes of steel C-profiles, see pp 135–136.
Properties of materials, see pg 14.

● ex stock
○ at short notice on request

Type Double-T (Original Material "S"® green)

Chain Guides for Roller Chains to DIN8187

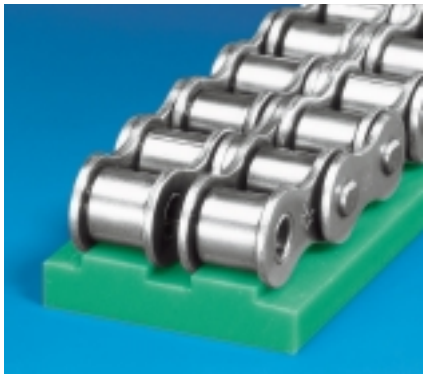

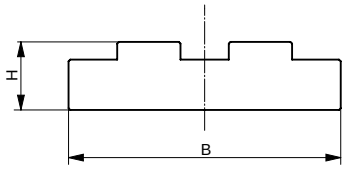

Chain size in inches	Chain size DIN8187	B mm	H mm	Weight kg/m	Length (tolerance +0/+7) mm	Part no.	Availability
3/8" x 7/32"	06B-2	25	10	0.22	2000	221 010 025	●
1/2" x 5/16"	08B-2	35	10	0.30	2000	221 010 026	●
1/2" x 5/16"	08B-2	35	15	0.46	2000	221 010 027	●
1/2" x 5/16"	08B-2	35	20	0.63	2000	221 010 028	●
1/2" x 5/16"	08B-2	35	30	1.00	2000	221 010 029	○
5/8" x 3/8"	10B-2	40	10	0.32	2000	221 010 030	●
3/4" x 7/16"	12B-2	45	10	0.38	2000	221 010 032	●
3/4" x 7/16"	12B-2	45	15	0.49	2000	221 010 031	○
1" x 17mm	16B-2	48	15	0.60	2000	221 010 033	●
1 1/4" x 3/4"	20B-2	55	15	0.67	2000	221 010 034	○
1 1/2" x 1"	24B-2	72	20	1.40	2000	221 010 035	○
1 3/4" x 31mm	28B-2	89	25	2.15	2000	221 010 036	○
2" x 31mm	32B-2	88	30	2.55	2000	221 010 037	○

All chain guides are available in Original Material "S"® green or Material "S" 1000®.
Please order as follows:
Example:
Chain guide in Original Material "S"® green
Part no.: 221 010 025
Chain guide in Material "S" 1000® green
Part no.: 221 020 025

Special sizes/designs, other technical or high-performance materials on request.
Special profiles, see pp 143–145.
Intermediate sizes available at short notice and charged at full meter prices. Tolerances at cross-section of plastic profile to DIN2768, tolerance class m.
Properties of materials, see pg 14.

● ex stock
○ at short notice on request

Type Double-CT (Original Material "S"® green)

Chain Guides with Steel C-Profile for Roller Chains to DIN8187

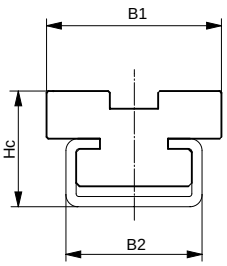

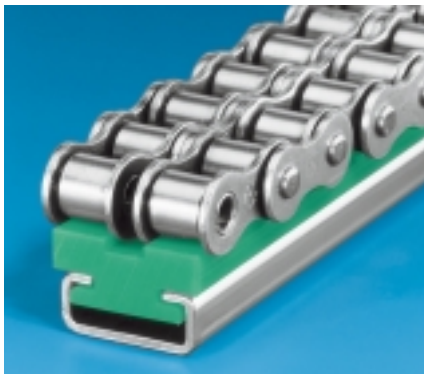

Chain size in inches	Chain size DIN8187	C-profile type	B_1 mm	B_2 mm	H_c mm	Weight kg/m	Length chain guide (tolerance +0/+7) mm	Length steel C-profile (tolerance +0/+40) mm	Part no.	Avail-ability
3/8" x 7/32"	06B-2	C3	15.7	20	17	0.71	2000	2000 6000	221 210 222 221 210 322	● ●
1/2" x 5/16"	08B-2	C3	21.2	20	17	0.82	2000	2000 6000	221 210 216 221 210 316	● ●
5/8" x 3/8"	10B-2	C3	25.7	20	17	0.83	2000	2000 6000	221 210 217 221 210 317	● ●
3/4" x 7/16"	12B-2	C5	30.7	28	20	1.24	2000	2000 6000	221 210 218 221 210 318	● ●
1" x 17mm	16B-2	C9	48.0	38	27	2.21	2000	2000 6000	221 210 219 221 210 319	○ ○
1 1/4" x 3/4"	20B-2	C12	55.0	60	30	3.47	2000	2000 6000	221 210 220 221 210 320	○ ○
1 1/2" x 1"	24B-2	C12	72.0	60	35	4.01	2000	2000 6000	221 210 221 221 210 321	○ ○

All chain guides are available in Original Material "S"® green or Material "S" 1000®.
Please order as follows:
Example:
Chain guide in Original Material "S"® green with steel C-profile, galvanized
Part no.: 221 210 222
Chain guide in Material "S" 1000® green with steel C-profile, galvanized
Part no.: 221 220 222

Special sizes/designs, other technical or high-performance materials on request.
Steel C-profile in stainless steel (V2A) also available ex stock.
Chain guides also available without steel C-profile.
Special profiles, see pp 143–145.
Intermediate sizes available at short notice and charged at full meter prices. Tolerances at cross-section of plastic profile to DIN2768, tolerance class m.
Tolerances and sizes of steel C-profiles, see pp 135–136. Properties of materials, see pg 14.

● ex stock
○ at short notice on request

Type TU (Original Material "S"® green)

Chain Guides for Roller Chains to DIN8187

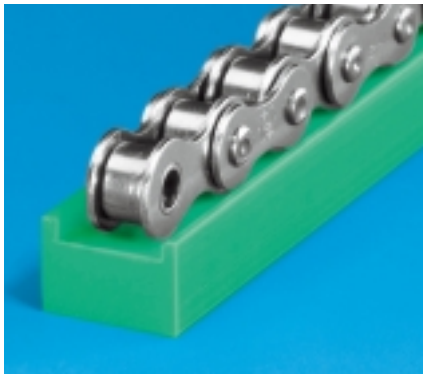

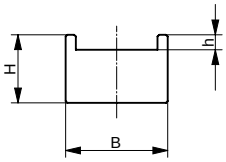

Chain size in inches	Chain size DIN8187	B mm	H mm	h mm	Weight kg/m	Length (tolerance +0/+7) mm	Part no.	Availability
3/8" x 5/32" 1/2" x 3/16"	– 083-1	15	10	2.2	0.2	2000	221 110 010	○

All chain guides are available in Original Material "S"® green or Material "S" 1000®.
Please order as follows:
Example:
Chain guide in Original Material "S"® green
Part no.: 221 110 010
Chain guide in Material "S" 1000® green
Part no.: 221 120 010

Special sizes/designs, other technical or high-performance materials on request.
Special profiles, see pp 143–145.
Intermediate sizes available at short notice and charged at full meter prices. Tolerances at cross-section of profile to DIN2768, tolerance class m.
Properties of materials, see pg 14.

● ex stock
○ at short notice on request

Type CTU (Original Material "S"® green)

Chain Guides with Steel C-Profile for Roller Chains to DIN8187

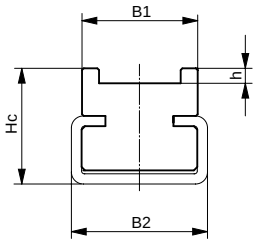

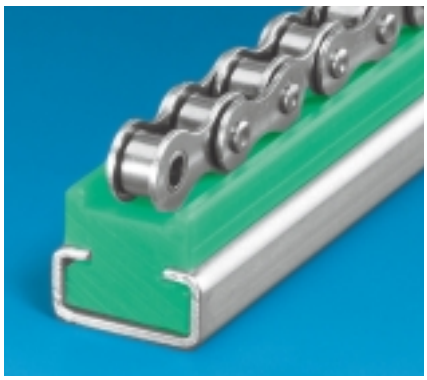

Chain size in inches	Chain size DIN8187	C-profile type	B_1 mm	B_2 mm	H_c mm	h mm	Weight kg/m	Length chain guide (tolerance +0/+7) mm	Length steel C-profile (tolerance +0/+40) mm	Part no. with steel C-profile, galvanized	Avail-ability
3/8" x 5/32"	–	C3	17	20	17	2.2	0.61	2000	2000	221 310 210	●
1/2" x 3/16"	083-1								6000	221 310 310	●

All chain guides are available in Original Material "S"® green or Material "S" 1000®.
Please order as follows:
Example:
Chain guide in Original Material "S"® green with steel C-profile, galvanized
Part no.: 221 3**1**0 210
Chain guide in Material "S" 1000® green with steel C-profile, galvanized
Part no.: 221 3**2**0 210

Special sizes/designs, other technical or high-performance materials on request.
Steel C-profile in stainless steel (V2A) also available ex stock.
Chain guides also available without steel C-profile.
Special profiles, see pp 143–145.
Intermediate sizes available at short notice and charged at full meter prices. Tolerances at cross-section of plastic profile to DIN2768, tolerance class m.
Tolerances and sizes of steel C-profiles, see pp 135–136. Properties of materials, see pg 14.

● ex stock
○ at short notice on request

Type TS (Original Material "S"® green)

Chain Guides for Roller Chains to DIN8187

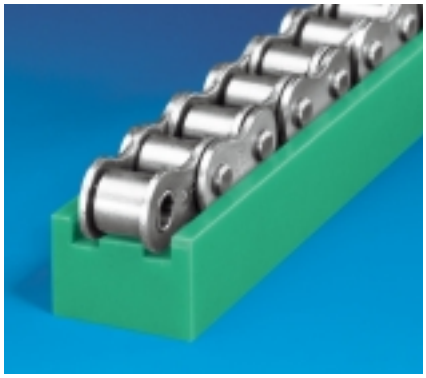

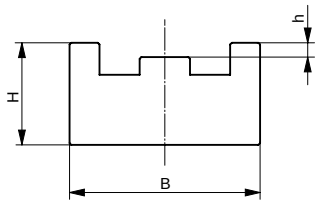

Chain size in inches	Chain size DIN8187	B mm	H mm	h mm	Weight kg/m	Length (tolerance +0/+7) mm	Part no.	Avail-ability
3/8" x 7/32"	06B-1	20	10	1.1	0.19	2000	221 110 001	●
1/2" x 3/16"	083-1	20	10	1.4	0.19	2000	221 110 002	○
1/2" x 1/4"	085-1	22	10	1.6	0.21	2000	221 110 003	●
1/2" x 5/16"	08B-1	25	15	1.6	0.35	2000	221 110 004	●
5/8" x 1/4"	–	24	15	2.1	0.35	2000	221 110 005	○
5/8" x 3/8"	10B-1	28	15	2.1	0.39	2000	221 110 006	●
3/4" x 7/16"	12B-1	30	20	2.8	0.56	2000	221 110 007	●
1" x 17mm	16B-1	42	25	3.3	0.99	2000	221 110 008	●
1 1/4" x 3/4"	20B-1	50	25	4.0	1.18	2000	221 110 009	●

All chain guides are available in Original Material "S"® green or Material "S" 1000®.
Please order as follows:
Example:
Chain guide in Original Material "S"® green
Part no.: 221 110 001
Chain guide in Material "S" 1000® green
Part no.: 221 120 001

Special sizes/designs, other technical or high-performance materials on request.
Special profiles, see pp 143–145.
Intermediate sizes available at short notice and charged at full meter prices. Tolerances at cross-section of profile to DIN2768, tolerance class m.
Properties of materials, see pg 14.

● ex stock
○ at short notice on request

Type CTS (Original Material "S"® green)

Chain Guides with Steel C-Profile for Roller Chains to DIN8187

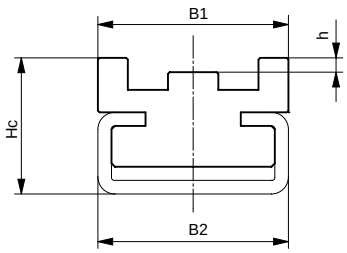

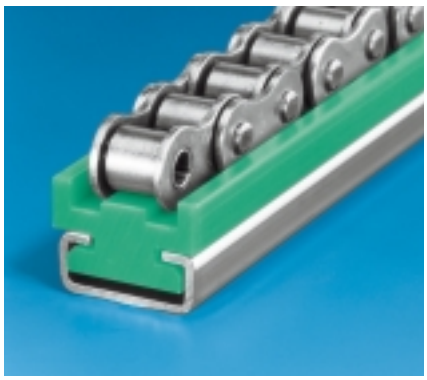

Chain size in inches	Chain size DIN8187	C-profile type	B_1 mm	B_2 mm	H_c mm	h mm	Weight kg/m	Length chain guide (tolerance +0/+7) mm	Length steel C-profile (tolerance +0/+40) mm	Part no. with steel C-profile, galvanized	Availability
3/8" x 7/32"	06B-1	C3	20	20	17	1.1	0.27	2000	2000 6000	221 310 201 221 310 301	● ●
1/2" x 3/16"	083-1	C3	20	20	17	1.4	0.27	2000	2000 6000	221 310 202 221 310 302	○ ○
1/2" x 1/4"	085-1	C3	22	20	17	1.6	0.80	2000	2000 6000	221 310 203 221 310 303	○ ○
1/2" x 5/16"	08B-1	C3	25	20	20	1.6	0.89	2000	2000 6000	221 310 204 221 310 304	● ●
5/8" x 1/4"	–	C3	25	20	20	2.1	0.89	2000	2000 6000	221 310 205 221 310 305	○ ○
5/8" x 3/8"	10B-1	C5	28	28	20	2.1	1.31	2000	2000 6000	221 310 206 221 310 306	● ●
3/4" x 7/16"	12B-1	C5	30	28	22	2.8	1.37	2000	2000 6000	221 310 207 221 310 307	● ●
1" x 17mm	16B-1	C9	42	38	30	3.3	2.42	2000	2000 6000	221 310 208 221 310 308	● ●
1 1/4" x 3/4"	20B-1	C9	50	38	35	4.0	2.84	2000	2000 6000	221 310 209 221 310 309	● ●

All chain guides are available in Original Material "S"® green or Material "S" 1000®.
Please order as follows:
Example:
Chain guide in Original Material "S"® green with steel C-profile, galvanized
Part no.: 221 310 201
Chain guide in Material "S" 1000® green with steel C-profile, galvanized
Part no.: 221 320 201

Special sizes/designs, other technical or high-performance materials on request.
Steel C-profile in stainless steel (V2A) also available ex stock.
Chain guides also available without steel C-profile.
Special profiles, see pp 143–145.
Intermediate sizes available at short notice and charged at full meter prices. Tolerances at cross-section of plastic profile to DIN2768, tolerance class m.
Tolerances and sizes of steel C-profiles, see pp 135-136.
Properties of materials, see pg 14.

● ex stock
○ at short notice on request

Type U (Original Material "S"® green)

Chain Guides for Roller Chains to DIN8187

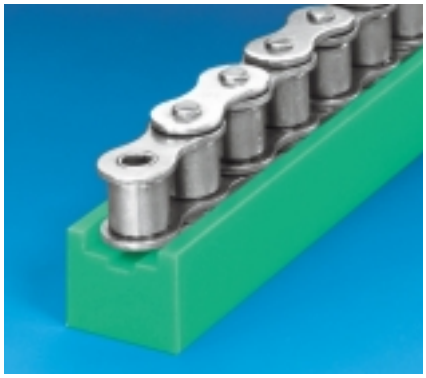

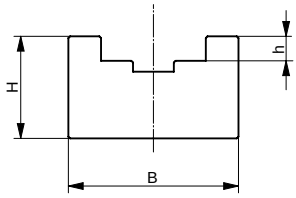

Chain size in inches	Chain size DIN8187	B mm	H mm	h mm	Weight kg/m	Length (tolerance +0/+7) mm	Part no.	Availability
3/8" x 5/32"	–	20	15	2.8	0.26	2000	221 110 012	○
3/8" x 7/32"	06B-1	20	15	2.8	0.26	2000	221 110 013	●
1/2" x 3/16"	083-1	20	15	2.3	0.25	2000	221 110 014	○
1/2" x 1/4"	085-1	20	15	3.2	0.25	2000	221 110 015	○
1/2" x 5/16"	08B-1	25	15	3.5	0.31	2000	221 110 017	●
5/8" x 1/4"	–	25	15	3.6	0.30	2000	221 110 016	○
5/8" x 3/8"	10B-1	25	15	3.6	0.30	2000	221 110 019	●
3/4" x 7/16"	12B-1	25	20	3.9	0.40	2000	221 110 020	●
1" x 17mm	16B-1	33	25	8.4	0.60	2000	221 110 021	●
1 1/4" x 3/4"	20B-1	55	25	10.0	1.08	2000	221 110 022	○
1 1/2" x 1"	24B-1	60	30	13.0	1.27	2000	221 110 023	○
1 3/4" x 31mm	28B-1	65	30	16.0	1.24	2000	221 110 024	○
2" x 31mm	32B-1	70	30	16.0	1.34	2000	221 110 025	○

All chain guides are available in Original Material "S"® green or Material "S" 1000®.
Please order as follows:
Example:
Chain guide in Original Material "S"® green
Part no.: 221 110 012
Chain guide in Material "S" 1000® green
Part no.: 221 120 012
Chain guides suitable for external shackle-type connector only.

Special sizes/designs, other technical or high-performance materials on request.
Special profiles, see pp 143–145.
Intermediate sizes available at short notice and charged at full meter prices. Tolerances at cross-section of profile to DIN2768, tolerance class m.
Properties of materials, see pg 14.

● ex stock
○ at short notice on request

Type CU (Original Material "S"® green)

Chain Guides with Steel C-Profile for Roller Chains to DIN8187

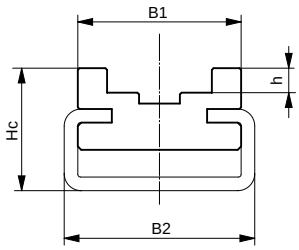

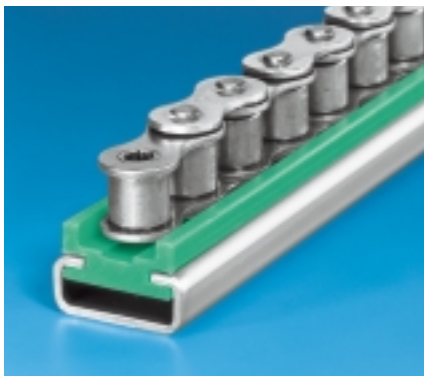

Chain size in inches	Chain size DIN8187	C-profile type	B_1 mm	B_2 mm	H_c mm	h mm	Weight kg/m	Length chain guide (tolerance +0/+7) mm	Length steel C-profile (tolerance +0/+40) mm	Part no. with steel C-profile, galvanized	Avail-ability
3/8" x 5/32"	–	C3	20	20	17	2.8	0.75	2000	2000 6000	221 310 211 221 310 311	● ●
3/8" x 7/32"	06B-1	C3	20	20	17	2.8	0.75	2000	2000 6000	221 310 213 221 310 313	○ ○
1/2" x 3/16"	083-1	C3	20	20	17	2.3	0.74	2000	2000 6000	221 310 215 221 310 315	● ●
1/2" x 1/4"	085-1	C5	28	28	18	3.2	1.11	2000	2000 6000	221 310 217 221 310 317	○ ○
1/2" x 1/4" *g=12,8mm*	–	C5	28	28	18	3.5	1.17	2000	2000 6000	221 310 219 221 310 319	○ ○
1/2" x 5/16"	08B-1	C1	20	24	11	3.5	0.42	2000	2000 6000	221 310 212 221 310 312	● ●
5/8" x 1/4"	–	C5	24	28	18	3.6	1.16	2000	2000 6000	221 310 221 221 310 321	● ●
5/8" x 3/8"	10B-1	C5	24	28	18	3.6	1.13	2000	2000 6000	221 310 214 221 310 314	● ●
3/4" x 7/16"	12B-1	C5	24	28	18	3.9	1.13	2000	2000 6000	221 310 216 221 310 316	● ●
1" x 17mm	16B-1	C9	33	38	30	8.4	2.26	2000	2000 6000	221 310 218 221 310 318	● ●
1 1/4" x 3/4"	20B-1	C12	60	60	35	10.0	3.21	2000	2000 6000	221 310 220 221 310 320	● ●
1 1/2" x 1"	24B-1	C12	60	60	40	13.0	3.51	2000	2000 6000	221 310 222 221 310 322	● ●
1 3/4" x 31mm	28B-1	C12	65	60	45	16.0	4.01	2000	2000 6000	221 310 223 221 310 323	○ ○
2" x 31mm	32B-1	C12	70	60	45	16.0	4.21	2000	2000 6000	221 310 224 221 310 324	○ ○

All chain guides are available in Original Material "S"® green or Material "S" 1000®.
Please order as follows:
Example:
Chain guide in Original Material "S"® green
green with steel C-profile, galvanized
Part no.: 221 3**1**0 211
Chain guide in Material "S" 1000® green
green with steel C-profile, galvanized
Part no.: 221 3**2**0 211

Special sizes/designs, other technical or high-performance materials on request.
Steel C-profile in stainless steel (V2A) also available ex stock.
Chain guides also available without steel C-profile.
Special profiles, see pp 143–145.
Intermediate sizes available at short notice and charged at full meter prices. Tolerances at cross-section of plastic profile to DIN2768, tolerance class m.
Tolerances and sizes of steel C-profiles, see pp 135–136.
Properties of materials, see pg 14.

● ex stock
○ at short notice on request

Type K (Original Material "S"® green)

Chain Guides for Roller Chains to DIN8187

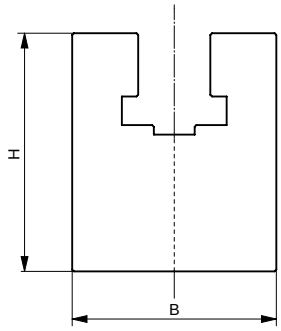

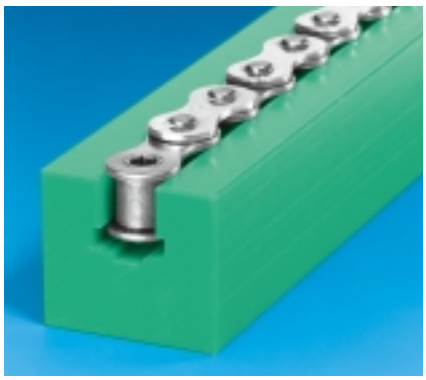

Chain size in inches	Chain size DIN8187	B mm	H mm	Weight kg/m	Length (tolerance +0/+7) mm	Part no.	Avail-ability
3/8" x 5/32"	–	20	25	0.43	2000	221 110 026	●
3/8" x 7/32"	06B-1	20	25	0.43	2000	221 110 027	●
1/2" x 3/16"	083-1	20	25	0.42	2000	221 110 028	○
1/2" x 1/4"	085-1	24	30	0.55	2000	221 110 029	○
1/2" x 1/4" * *g=12,8mm*	–	24	30	0.55	2000	221 110 030	○
1/2" x 5/16"	08B-1	24	30	0.55	2000	221 110 031	●
5/8" x 1/4"	–	30	30	0.73	2000	221 110 032	●
5/8" x 3/8"	10B-1	30	35	0.83	2000	221 110 033	●
3/4" x 7/16"	12B-1	40	35	1.10	2000	221 110 034	●
1" x 17mm	16B-1	40	45	1.22	2000	221 110 035	●
1 1/4" x 3/4"	20B-1	50	50	1.76	2000	221 110 036	●
1 1/2" x 1"	24B-1	60	60	2.35	2000	221 110 037	●
1 3/4" x 31mm	28B-1	60	70	2.52	2000	221 110 038	●
2" x 31mm	32B-1	70	75	3.35	2000	221 110 039	○

All chain guides are available in Original Material "S"® green or Material "S" 1000®.
Please order as follows:
Example:
Chain guide in Original Material "S"® green
Part no.: 221 110 026
Chain guide in Material "S" 1000® green
Part no.: 221 120 026

Chain guides suitable for external shackle-type connector only. Two-part design available on request.
Special sizes/designs, other technical or high-performance materials on request.
Special profiles, see pp 143–145.
Intermediate sizes available at short notice and charged at full meter prices. Tolerances at cross-section of profile to DIN2768, tolerance class m.
Properties of materials, see pg 14.

● ex stock
○ at short notice on request

Type CK (Original Material "S"® green)

Chain Guides with Steel C-Profile for Roller Chains to DIN8187

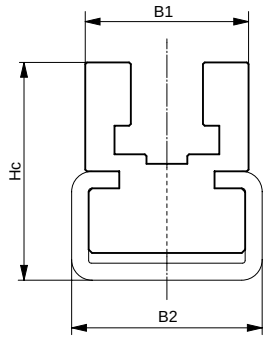

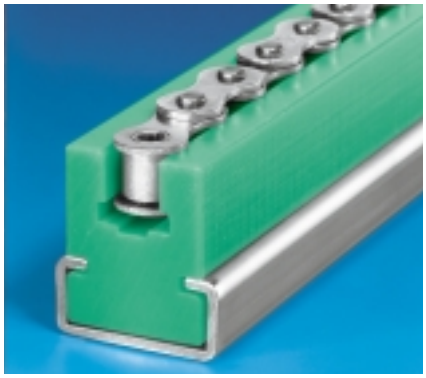

Chain size in inches	Chain size DIN8187	C-profile type	B_1 mm	B_2 mm	H_c mm	Weight kg/m	Length chain guide (tolerance +0/+7) mm	Length steel C-profile (tolerance +0/+40) mm	Part no. with steel C-profile, galvanized	Availability
3/8" x 5/32"	–	C3	20	20	21	0.92	2000	2000 6000	221 310 225 221 310 325	● ●
3/8" x 2/32"	06B-1	C3	20	20	21	0.92	2000	2000 6000	221 310 226 221 310 326	● ●
1/2" x 3/16"	083-1	C3	20	20	21	0.92	2000	2000 6000	221 310 227 221 310 327	○ ○
1/2" x 1/4"	085-1	C7	24	28	32	1.76	2000	2000 6000	221 310 228 221 310 328	○ ○
1/2" x 1/4" *g=12,8mm*	–	C7	24	28	32	1.76	2000	2000 6000	221 310 229 221 310 329	○ ○
1/2" x 5/16"	08B-1	C7	24	28	32	1.76	2000	2000 6000	221 310 230 221 310 330	● ●
5/8" x 1/4"	–	C7	24	28	32	1.69	2000	2000 6000	221 310 231 221 310 331	○ ○
5/8" x 3/8"	10B-1	C7	24	28	32	1.69	2000	2000 6000	221 310 232 221 310 332	● ●
3/4" x 7/16"	12B-1	C9	32	38	43	2.86	2000	2000 6000	221 310 233 221 310 333	● ●
1" x 17mm	16B-1	C9	40	38	50	2.70	2000	2000 6000	221 310 234 221 310 334	● ●
1 1/4" x 3/4"	20B-1	C12	60	60	55	4.81	2000	2000 6000	221 310 235 221 310 335	○ ○
1 1/2" x 1"	24B-1	C12	60	60	65	5.01	2000	2000 6000	221 310 236 221 310 336	○ ○
1 3/4" x 31mm	28B-1	C12	70	60	80	6.21	2000	2000 6000	221 310 237 221 310 337	○ ○
2" x 31mm	32B-1	C12	70	60	80	6.21	2000	2000 6000	221 310 238 221 310 338	○ ○

All chain guides are available in Original Material "S"® green or Material "S" 1000®.
Please order as follows:
Example:
Chain guide in Original Material "S"® green with steel C-profile, galvanized
Part no.: 221 310 225
Chain guide in Material "S" 1000® green with steel C-profile, galvanized
Part no.: 221 320 225

Chain guides suitable for external shackle-type connector only. Two-part design available on request.
Special sizes/designs, other technical or high-performance materials on request.
Steel C-profile in stainless steel (V2A) also available ex stock.
Chain guides also available without steel C-profile.
Special profiles, see pp 143-145.

Intermediate sizes available at short notice and charged at full meter prices. Tolerances at cross-section of plastic profile to DIN2768, tolerance class m.
Tolerances and sizes of steel C-profiles, see pp 135–136.
Properties of materials, see pg 14.

● ex stock
○ at short notice on request

Type CKG (Original Material "S"® green)

Chain Guides with Steel C-Profile for Roller Chains to DIN8187

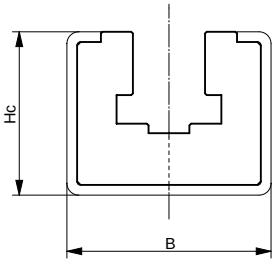

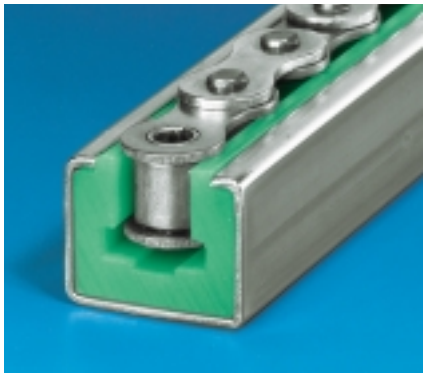

Chain size in inches	Chain size DIN8187	C-profile type	B mm	Hc mm	Weight kg/m	Length chain guide (tolerance +0/+7) mm	Length steel C-profile (tolerance +0/+40) mm	Part no. with steel C-profile, galvanized	Availability
3/8" x 5/32"	–	C10	30	24	1.47	2000	2000 6000	221 410 201 221 410 301	● ●
3/8" x 7/32"	06B-1	C10	30	24	1.30	2000	2000 6000	221 410 202 221 410 302	● ●
1/2" x 3/16"	083-1	C10	30	24	1.30	2000	2000 6000	221 410 203 221 410 303	● ●
1/2" x 1/4"	085-1	C10	30	24	1.30	2000	2000 6000	221 410 220 221 410 320	● ●
1/2" x 1/4" *g=12,8mm*	–	C10	30	24	1.30	2000	2000 6000	221 410 221 221 410 321	○ ○
1/2" x 5/16"	08B-1	C10	30	24	1.30	2000	2000 6000	221 410 204 221 410 304	● ●
5/8" x 1/4"	–	C10	30	24	1.30	2000	2000 6000	221 410 222 221 410 322	● ●
5/8" x 3/8"	10B-1	C10	30	24	1.30	2000	2000 6000	221 410 205 221 410 305	● ●
3/4" x 7/16"	12B-1	C10	30	24	1.30	2000	2000 6000	221 410 206 221 410 306	● ●
1" x 17mm	16B-1	C11	45	40	3.18	2000	2000 6000	221 410 207 221 410 307	● ●
1 1/4" x 3/4"	20B-1	C11	45	40	3.07	2000	2000 6000	221 410 208 221 410 308	● ●
1 1/2" x 1"	24B-1	C13	65	55	6.26	2000	2000 6000	221 410 209 221 410 309	● ●
1 3/4" x 31mm	28B-1	C13	65	55	5.86	2000	2000 6000	221 410 210 221 410 310	● ●
2" x 31mm	32B-1	C13	65	55	5.76	2000	2000 6000	221 410 211 221 410 311	● ●

All chain guides are available in Original Material "S"® green or Material "S" 1000®.
Please order as follows:
Example:
Chain guide in Original Material "S"® green with steel C-profile, galvanized
Part no.: 221 4**1**0 201
Chain guide in Material "S" 1000® green with steel C-profile, galvanized
Part no.: 221 4**2**0 201

Chain guides suitable for external shackle-type connector only. Two-part design available on request.
Special sizes/designs, other technical or high-performance materials on request.
Steel C-profile in stainless steel (V2A) also available ex stock.
Chain guides also available without steel C-profile.
Special profiles, see pp 143–145.
Intermediate sizes available at short notice and charged at full meter prices.

Tolerances at cross-section of plastic profile to DIN 2768, tolerance class m. Tolerances and sizes of steel C-profiles, see pp 135–136. Properties of materials, see pg 14.

● ex stock
○ at short notice on request

Type CKG 15 V (Original Material "S"® green)

Chain Guides with Steel C-Profile for Roller Chains to DIN8187

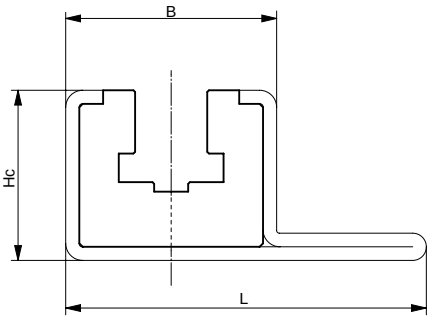

Chain size in inches	Chain size DIN8187	C-profile type	B mm	H_C mm	L mm	Weight kg/m	Length chain guide (tolerance +0/+7) mm	Length steel C-profile (tolerance +0/+40) mm	Part no. with steel C-profile, galvanized	Availability
3/8" x 5/32"	–	C15 V	31	25	53	2.34	2000	2000 6000	221 410 228 221 410 328	● ●
3/8" x 7/32"	06B-1	C15 V	31	25	53	2.34	2000	2000 6000	221 410 216 221 410 316	● ●
1/2" x 3/16"	083-1	C15 V	31	25	53	2.30	2000	2000 6000	221 410 229 221 410 329	● ●
1/2" x 1/4"	085-1	C15 V	31	25	53	2.30	2000	2000 6000	221 410 230 221 410 330	● ●
1/2" x 5/16"	08B-1	C15 V	31	25	53	2.30	2000	2000 6000	221 410 217 221 410 317	● ●
5/8" x 1/4"	–	C15 V	31	25	53	2.25	2000	2000 6000	221 410 232 221 410 332	● ●
5/8" x 3/8"	10B-1	C15 V	31	25	53	2.25	2000	2000 6000	221 410 218 221 410 318	● ●
3/4" x 7/16"	12B-1	C15 V	31	25	53	2.25	2000	2000 6000	221 410 219 221 410 319	● ●

All chain guides are available in Original Material "S"® green or Material "S" 1000®.
Please order as follows:
Example:
Chain guide in Original Material "S"®green with steel C-profile, galvanized
Part no.: 221 4**1**0 228
Chain guide in Material "S" 1000® green with steel C-profile, galvanized
Part no.: 221 4**2**0 228

Chain guides suitable for external shackle-type connector only. Two-part design available on request.
Special sizes/designs, other technical or high-performance materials on request.
Steel C-profile in stainless steel (V2A) also available ex stock.
Chain guides also available without steel C-profile.
Special profiles, see pp 143–145.

Intermediate sizes available at short notice and charged at full meter prices. Tolerances at cross-section of plastic profile to DIN2768, tolerance class m.
Tolerances and sizes of steel C-profiles, see pp 135–136.
Properties of materials, see pg 14.

● ex stock
○ at short notice on request

Type CKG 14 H (Original Material "S"® green)

Chain Guides with Steel C-Profile for Roller Chains to DIN8187

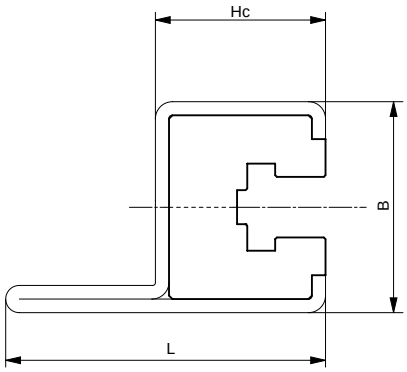

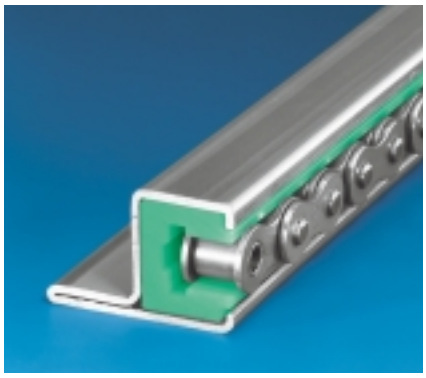

Chain size in inches	Chain size DIN8187	C-profile type	B mm	H_C mm	L mm	Weight kg/m	Length chain guide (tolerance +0/+7) mm	Length steel C-profile (tolerance +0/+40) mm	Part no. with steel C-profile, galvanized	Availability
3/8" x 5/32"	–	C14H	31	25	47	2.30	2000	2000 6000	221 410 223 221 410 323	● ●
3/8" x 7/32"	06B-1	C14H	31	25	47	2.29	2000	2000 6000	221 410 212 221 410 312	● ●
1/2" x 3/16"	083-1	C14H	31	25	47	2.29	2000	2000 6000	221 410 224 221 410 324	● ●
1/2" x 1/4"	085-1	C14H	31	25	47	2.29	2000	2000 6000	221 410 225 221 410 325	● ●
1/2" x 5/16"	08B-1	C14H	31	25	47	2.29	2000	2000 6000	221 410 213 221 410 313	● ●
5/8" x 1/4"	–	C14H	31	25	47	2.24	2000	2000 6000	221 410 227 221 410 327	● ●
5/8" x 3/8"	10B-1	C14H	31	25	47	2.24	2000	2000 6000	221 410 214 221 410 314	● ●
3/4" x 7/16"	12B-1	C14H	31	25	47	2.20	2000	2000 6000	221 410 215 221 410 315	● ●

All chain guides are available in Original Material "S"® green or Material "S" 1000®.
Please order as follows:
Example:
Chain guide in Original Material "S"® green with steel C-profile, galvanized
Part no.: 221 4**1**0 223
Chain guide in Material "S" 1000® green with steel C-profile, galvanized
Part no.: 221 4**2**0 223

Chain guides suitable for external shackle-type connector only. Two-part design available on request.
Special sizes/designs, other technical or high-performance materials on request.
Steel C-profile in stainless steel (V2A) also available ex stock.
Chain guides also available without steel C-profile.
Special profiles, see pp 143–145.

Intermediate sizes available at short notice and charged at full meter prices. Tolerances at cross-section of plastic profile to DIN2768, tolerance class m.
Tolerances and sizes of steel C-profiles, see pp 135–136.
Properties of materials, see pg 14.

● ex stock
○ at short notice on request

Type ETA (Original Material "S"® green)

Double-Decker Chain Guides with Steel C-Profile for Roller Chains to DIN8187

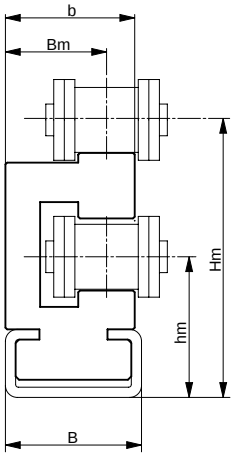

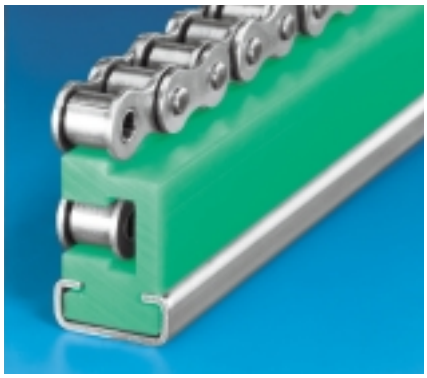

Chain size in inches	Chain size DIN8187	C-profile type	B mm	Hm mm	b mm	Bm mm	hm mm	Weight kg/m	Length chain guide (tolerance +0/+7) mm	Length steel C-profile (tolerance +0/+40) mm	Part no.	Availability
3/8" x 7/32"	06B-1	C3	20	30.2	17	14.5	17	0.90	2000	2000 6000	221 310 239 221 310 339	● ●
1/2" x 5/16"	08B-1	C3	20	33.8	20	16.5	18	0.97	2000	2000 6000	221 310 240 221 310 340	● ●
5/8" x 3/8"	10B-1	C3	20	41.1	20	15.5	21	1.13	2000	2000 6000	221 310 241 221 310 341	● ●
3/4" x 7/16"	12B-1	C5	28	46.5	24	18.5	24	1.72	2000	2000 6000	221 310 242 221 310 342	● ●
1" x 17 mm	16B-1	C9	38	62.0	33	25.0	34	3.17	2000	2000 6000	221 310 243 221 310 343	● ●

All chain guides are available in Original Material "S"® green or Material "S" 1000®.
Please order as follows:
Example:
Chain guide in Original Material "S"® green
with steel C-profile, galvanized
Part no.: 221 310 239
Chain guide in Material "S" 1000® green
with steel C-profile, galvanized
Part no.: 221 320 239

Special sizes/designs, other technical or high-performance materials on request.
Steel C-profile in stainless steel (V2A) also available ex stock.
Chain guides also available without steel C-profile.
Special profiles, see pp 143–145.

Intermediate sizes available at short notice and charged at full meter prices. Tolerances at cross-section of plastic profile to DIN2768, tolerance class m.
Tolerances and sizes of steel C-profiles, see pp 135–136.
Properties of materials, see pg 14.

● ex stock
○ at short notice on request

Ø36 +0.1
Ø42H11

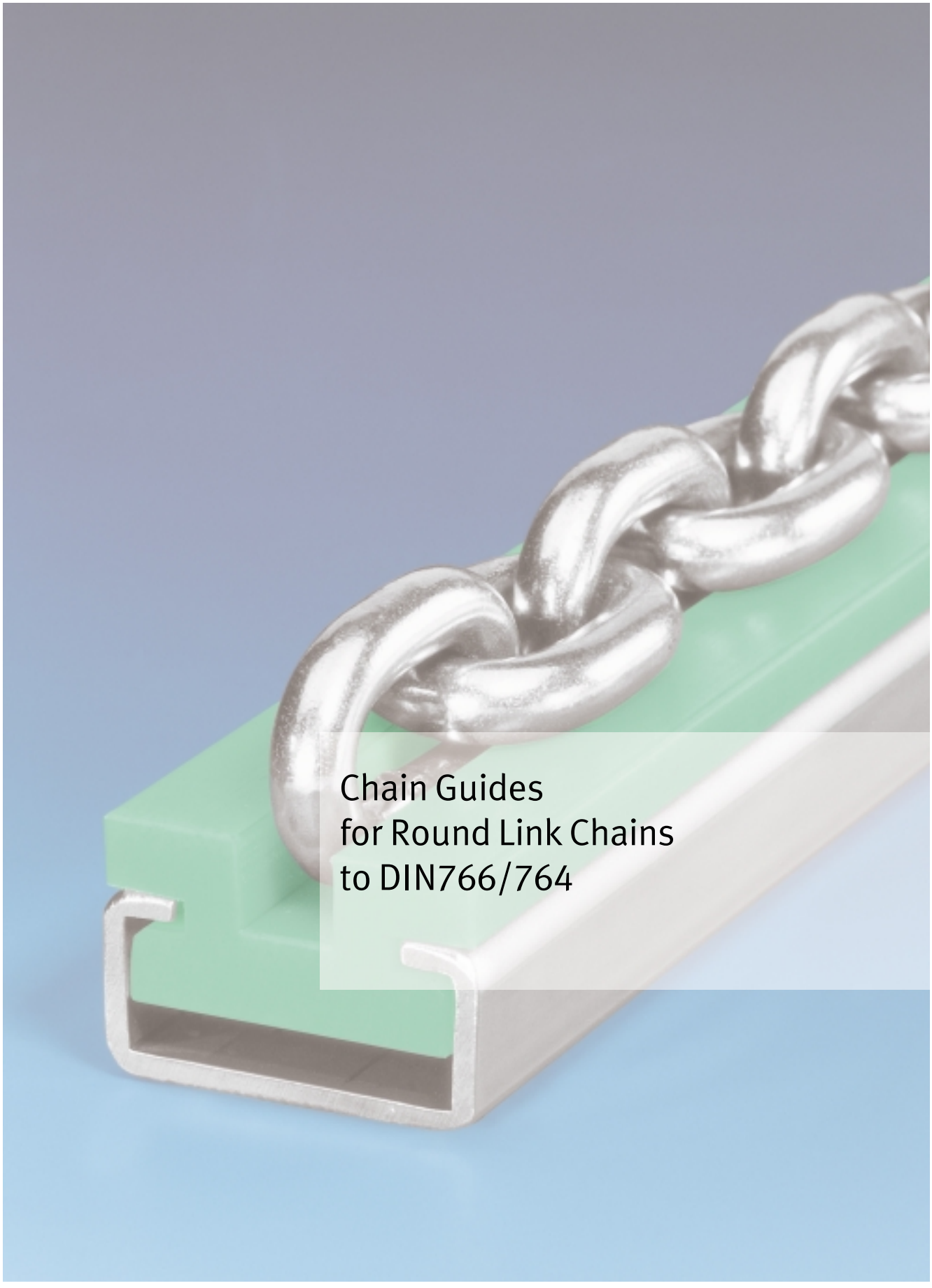

Chain Guides for Round Link Chains to DIN766/764

365
177.68
R10
20.49°
37.5°
90°
47.5
27.5
25
50
78.92
Schnitt
Schnitt
"a"
"a"
"a"
4.5+0.5
Ø80
8.16
42.5
30
Ø11.9
Ø17
32
15
16.5
Ø11.5
59

Guides for Round Link Chains

Our standard range of guides for round link chains comprises four different designs in two materials at your option: high-quality Original Material "S"® green and lower-cost Material "S" 1000® green.

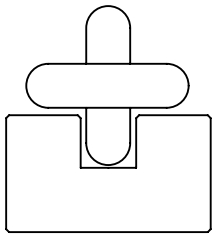

Type R
on pg 114

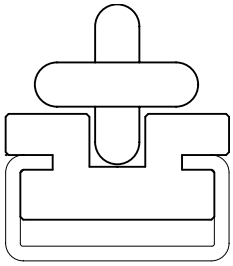

Type CRU
on pg 115

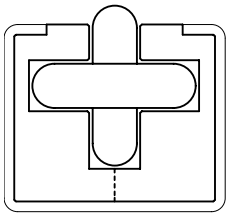

Type CRG
on pg 116

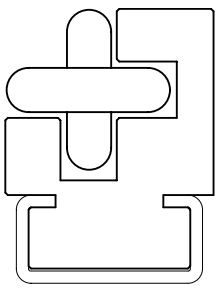

Type CRO
on pg 117

Type R (Original Material "S"® green)

Guides for Round Link Chains to DIN766 / 764

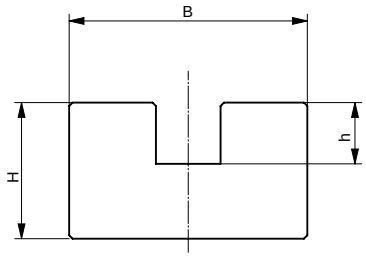

Chain size DIN766 /764	B1 mm	H mm	h mm	Weight kg/m	Length chain guide (tolerance +0/+7) mm	Part no.	Availability
6	30	15	7	0.40	2000	231 010 001	●
8	38	20	9	0.62	2000	231 010 002	●
10	45	25	11	1.01	2000	231 010 003	●
13	55	30	15	1.43	2000	231 010 004	●

All chain guides are available in Original Material "S"® green or Material "S" 1000®.
Please order as follows:
Example:
Chain guide in Original Material "S"® green
Part no.: 231 010 001
Chain guide in Material "S" 1000® green
Part no.: 231 020 001

For round link chains not corresponding to DIN766 or 764, please state measurements.
Special sizes/designs, other technical or high-performance materials on request.
Special profiles, see pp 143–145.
Intermediate sizes available at short notice and charged at full meter prices. Tolerances at cross-section of profile to DIN2768, tolerance class m.
Properties of materials, see pg 14.

● ex stock
○ at short notice on request

Type CRU (Original Material "S"® green)

Guides with Steel C-Profile for Round Link Chains to DIN766 / 764

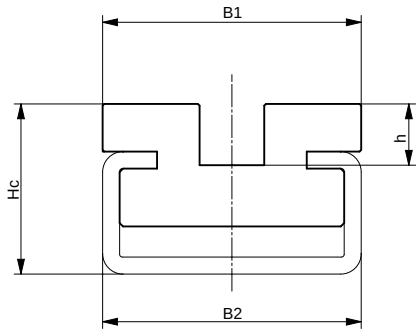

Chain size DIN766/764	C-profile type	B_1 mm	B_2 mm	H_c mm	h mm	Weight kg/m	Length chain guide (tolerance +0/+7) mm	Length steel C-profile (tolerance +0/+40) mm	Part no.	Availability
6	C5	30	28	18	7	1.17	2000	2000 6000	231 110 205 231 110 305	● ●
8	C9	38	38	25	9	2.00	2000	2000 6000	231 110 206 231 110 306	● ●
10	C9	45	38	28	11	2.11	2000	2000 6000	231 110 207 231 110 307	● ●
13	C12	60	60	33	15	5.53	2000	2000 6000	231 110 208 231 110 308	● ●

All chain guides are available in Original Material "S"® green or Material "S" 1000®.
Please order as follows:
Example:
Chain guide in Original Material "S"® green with steel C-profile, galvanized
Part no.: 231 1**1**0 205
Chain guide in Material "S" 1000® green with steel C-profile, galvanized
Part no.: 231 1**2**0 205
For round link chains not corresponding to DIN766 or 764, please state measurements.

Special sizes/designs, other technical or high-performance materials on request.
Steel C-profile in stainless steel (V2A) also available ex stock.
Chain guides also available without steel C-profile.
Special profiles, see pp 143–145.
Intermediate sizes available at short notice and charged at full meter prices. Tolerances at cross-section of plastic profile to DIN2768, tolerance class m.
Tolerances and sizes of steel C-profiles, see pp 135-136.
Properties of materials, see pg 14.

● ex stock
○ at short notice on request

Type CRG (Original Material "S"® green)

Guides with Steel C-Profile for Round Link Chains to DIN766 / 764

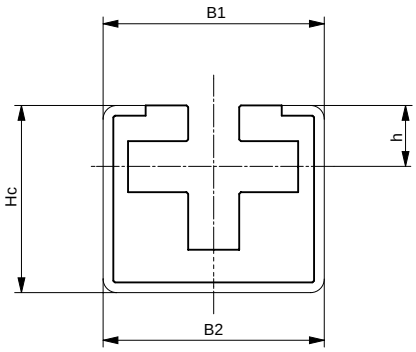

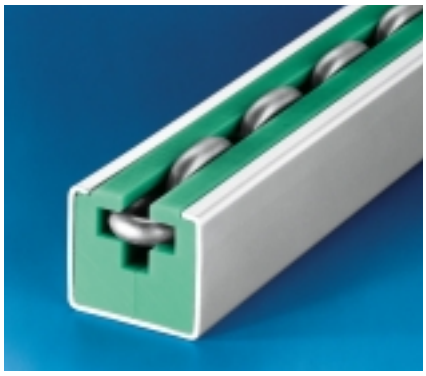

Chain size DIN766/764	C-profile type	B_1 mm	H_c mm	h mm	Weight kg/m	Length chain guide (tolerance +0/+7) mm	Length steel C-profile (tolerance +0/+40) mm	Part no. with steel C-profile, galvanized	Availability
6	C11	45	40	8.0	2.5	2000	2000 6000	231 110 209 231 110 309	● ●
8	C11	45	40	9.5	2.4	2000	2000 6000	231 110 210 231 110 310	● ●
10	C13	65	55	14.0	6.7	2000	2000 6000	231 110 211 231 110 311	● ●
13	C13	65	55	18.0	6.5	2000	2000 6000	231 110 212 231 110 312	● ●

All chain guides are available in Original Material "S"® green or Material "S" 1000®.
Please order as follows:
Example:
Chain guide in Original Material "S"® green with steel C-profile, galvanized
Part no.: 231 1**1**0 209
Chain guide in Material "S" 1000® green with steel C-profile, galvanized
Part no.: 231 1**2**0 209
For round link chains not corresponding to DIN766 or 764, please state measurements.

Special sizes/designs, other technical or high-performance materials on request.
Steel C-profile in stainless steel (V2A) also available ex stock.
Chain guides also available without steel C-profile.
Special profiles, see pp 143–145.
Intermediate sizes available at short notice and charged at full meter prices. Tolerances at cross-section of plastic profile to DIN2768, tolerance class m.
Tolerances and sizes of steel C-profiles, see pp 135–136. Properties of materials, see pg 14.

● ex stock
○ at short notice on request

Type CRO (Original Material "S"® green)

Guides with Steel C-Profile for Round Link Chains to DIN766 / 764

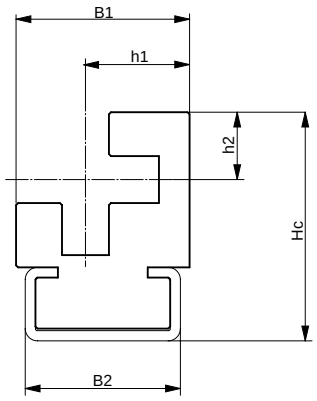

Chain size DIN766/764	C-profile type	B1 mm	B2 mm	Hc m	h_1 mm	h_2 mm	Weight kg/m	Length chain guide (tolerance +0/+7) mm	Length steel C-profile (tolerance +0/+40) mm	Part no.	Availability
6	C3	27.0	20	34	17.5	10.5	1.16	2000	2000 6000	231 110 201 231 110 301	● ●
8	C5	32.0	28	42	20.5	12.5	2.20	2000	2000 6000	231 110 202 231 110 302	● ●
10	C9	42.5	38	56	25.5	16.5	3.26	2000	2000 6000	231 110 203 231 110 303	● ●
13	C12	60.0	60	70	33.5	20.5	4.10	2000	2000 6000	231 110 204 231 110 304	● ●

All chain guides are available in Original Material "S"® green or Material "S" 1000®.
Please order as follows:
Example:
Chain guide in Original Material "S"® green with steel C-profile, galvanized
Part no.: 231 110 201
Chain guide in Material "S" 1000® green with steel C-profile, galvanized
Part no.: 231 120 201
For round link chains not corresponding to DIN766 or 764, please state measurements.

Special sizes/designs, other technical or high-performance materials on request.
Steel C-profile in stainless steel (V2A) also available ex stock.
Chain guides also available without steel C-profile.
Special profiles, see pp 143–145.
Intermediate sizes available at short notice and charged at full meter prices. Tolerances at cross-section of plastic profile to DIN2768, tolerance class m.
Tolerances and sizes of steel C-profiles, see pp 135–136. Properties of materials, see pg 14.

● ex stock
○ at short notice on request

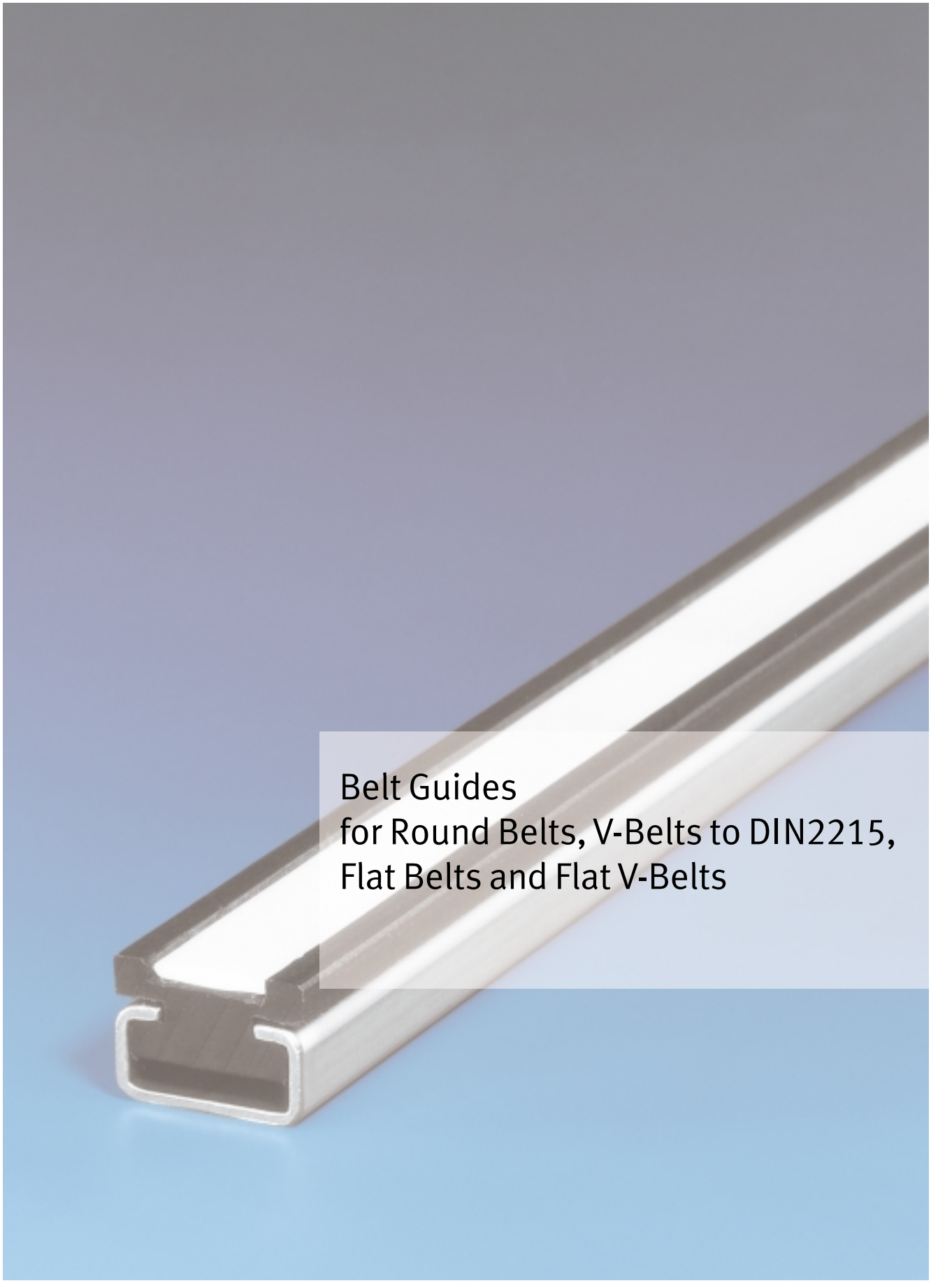

Belt Guides
for Round Belts, V-Belts to DIN2215, Flat Belts and Flat V-Belts

Ø36 +0.1
Ø42H11

Belt Guides

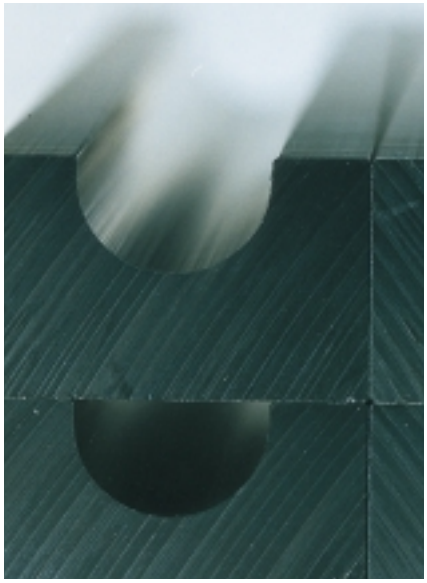

Metal supports and guides lead to heavy abrasion on belts and need higher drive forces due to the high level of friction between belt and guides.

By contrast, Original Material "S"® black antistatic offers clear advantages. That is why we recommend it for guides of round belts, V-belts, flat belts and flat V-belts.

For round belts

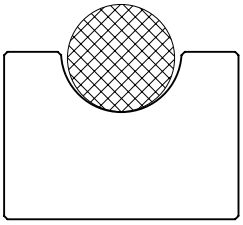

Type RR
on pg 122

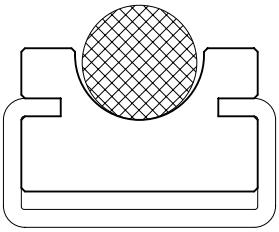

Type RRC
on pg 123

For V-belts

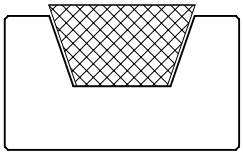

Type KR
on pg 124

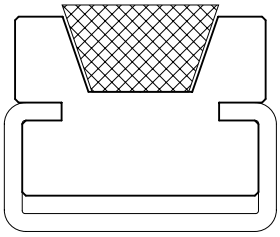

Type KRC
on pg 125

For flat belts

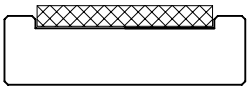

Type FR
on pg 126

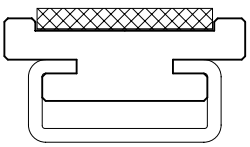

Type FRC
on pg 127

For flat V-belts

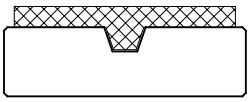

Type FK
on pg 128

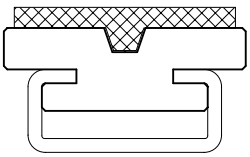

Type FKC
on pg 129

Type RR (Original Material "S"® black antistatic)

Guides for Round Belts

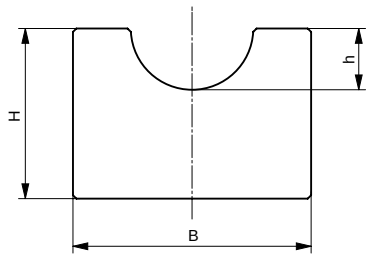

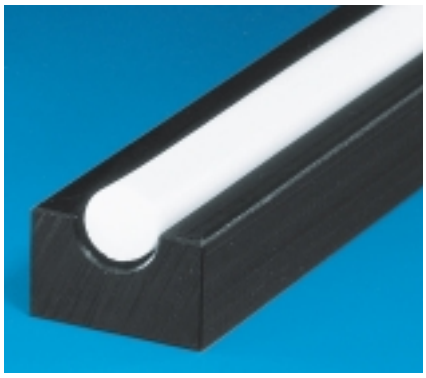

Belt type/ø	B mm	H mm	h mm	Weight kg/m	Length belt guide (tolerance +0/+7) mm	Part no.	Avail-ability
5.0	20	10	3	0.18	2000	231 010 027	●
6.3	20	10	4	0.17	2000	231 010 028	●
8.0	20	12	5	0.20	2000	231 010 029	●
9.5	25	15	6	0.30	2000	231 010 030	●
12.5	28	20	8	0.49	2000	231 010 031	●
15.0	33	25	10	0.70	2000	231 010 032	●
18.0	38	25	12	0.78	2000	231 010 033	●

Special sizes/designs, other technical or high-performance materials on request.
Intermediate sizes available at short notice and charged at full meter prices. Tolerances at cross-section of profile to DIN2768, tolerance class m.
Properties of materials, see pg 14.

● ex stock
○ at short notice on request

Type RRC (Original Material "S"® black antistatic)

Guides with Steel C-Profile for Round Belts

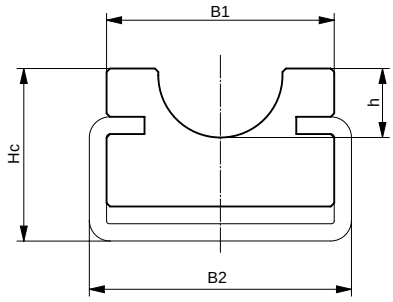

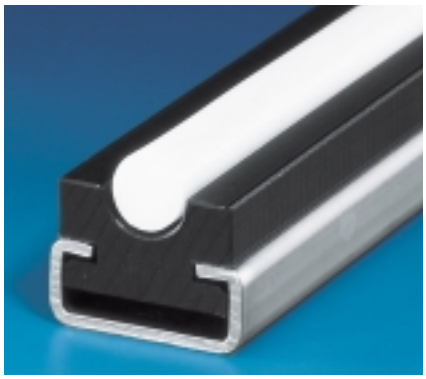

Belt type/ø	C-profile type	B_1 mm	B_2 m	H_c mm	h mm	Weight kg/m	Length belt guide (tolerance +0/+7) mm	Length steel C-profile (tolerance +0/+40) mm	Part no.	Avail-ability
5.0	C3	20	20	15	3	0.63	2000	2000 6000	231 110 235 231 110 335	● ●
6.3	C3	20	20	18	4	0.71	2000	2000 6000	231 110 236 231 110 336	● ●
8.0	C3	20	20	18	5	0.70	2000	2000 6000	231 110 237 231 110 337	● ●
9.5	C5	25	28	20	6	1.12	2000	2000 6000	231 110 238 231 110 338	● ●
12.5	C5	28	28	20	8	1.12	2000	2000 6000	231 110 239 231 110 339	● ●
15.0	C9	33	38	25	10	1.93	2000	2000 6000	231 110 240 231 110 340	● ●
18.0	C9	38	38	25	12	1.92	2000	2000 6000	231 110 241 231 110 341	● ●

Special sizes/designs, other technical or high-performance materials on request.
Steel C-profile in stainless steel (V2A) also available ex stock.
Belt guides also available without steel C-profile.
Intermediate sizes available at short notice and charged at full meter prices.

Tolerances at cross-section of plastic profile to DIN2768, tolerance class m.
Tolerances and sizes of steel C-profiles, see pp 135-136. Properties of materials, see pg 14.

● ex stock
○ at short notice on request

Type KR (Original Material "S"® black antistatic)

Guides for V-Belts to DIN2215

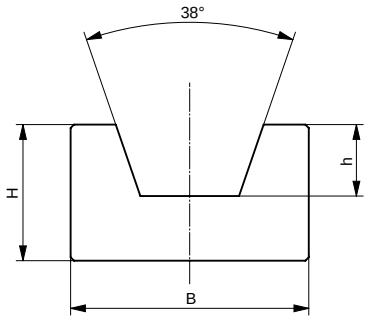

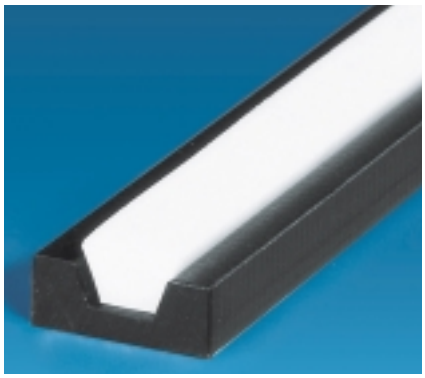

Belt type w x h	B mm	H mm	h mm	Weight kg/m	Length belt guide (tolerance +0/+7) mm	Part no.	Avail-ability
8 x 5	20	10	3.5	0.17	2000	231 010 005	○
10 x 6	20	10	4.5	0.16	2000	231 010 006	●
13 x 8	20	12	6.0	0.17	2000	231 010 007	●
17 x 11	30	15	8.0	0.33	2000	231 010 008	●
20 x 12.5	30	20	9.0	0.43	2000	231 010 009	○
22 x 14	35	20	10.5	0.49	2000	231 010 010	●
25 x 16	40	25	12.0	0.73	2000	231 010 011	○
32 x 20	50	30	16.0	1.04	2000	231 010 012	○
40	60	35	21.0	1.37	2000	231 010 013	○

Special sizes/designs, other technical or high-performance materials on request.
Intermediate sizes available at short notice and charged at full meter prices.
Tolerances at cross-section of profile to DIN2768, tolerance class m.
Properties of materials, see pg 14.

● ex stock
○ at short notice on request

Type KRC (Original Material "S"® black antistatic)

Guides with Steel C-Profile for V-Belts to DIN2215

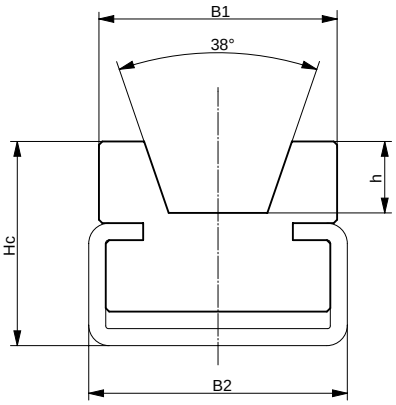

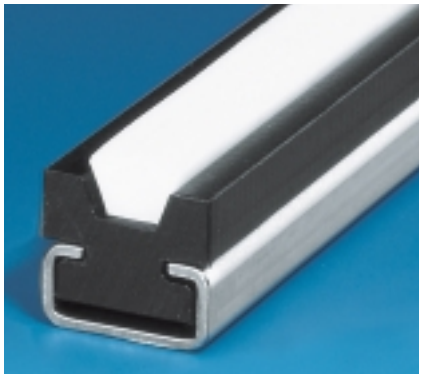

Belt type w x h	C-profile type	B_1 mm	B_2 mm	H_c mm	h mm	Weight kg/m	Length belt guide (tolerance +0/+7) mm	Length steel C-profile (tolerance +0/+40) mm	Part no.	Availability
8 x 5	C3	20	20	15	3.5	0.63	2000	2000 6000	231 110 213 231 110 313	● ●
10 x 6	C3	20	20	18	4.5	0.70	2000	2000 6000	231 110 214 231 110 314	● ●
13 x 8	C5	25	28	22	6.0	1.19	2000	2000 6000	231 110 215 231 110 315	● ●
17 x 11	C5	30	28	24	8.0	1.20	2000	2000 6000	231 110 216 231 110 316	● ●
20 x 12.5	C5	30	28	24	9.0	1.18	2000	2000 6000	231 110 217 231 110 317	● ●
22 x 14	C9	35	38	30	10.5	2.06	2000	2000 6000	231 110 218 231 110 318	● ●
25 x 16	C9	40	38	32	12.0	2.05	2000	2000 6000	231 110 219 231 110 319	● ●
32 x 20	C12	60	60	40	16.0	3.66	2000	2000 6000	231 110 220 231 110 320	● ●
40	C12	60	60	40	21.0	3.37	2000	2000 6000	231 110 221 231 110 321	● ●

Special sizes/designs, other technical or high-performance materials on request.
Steel C-profile in stainless steel (V2A) also available ex stock.
Belt guides also available without steel C-profile.
Intermediate sizes available at short notice and charged at full meter prices.

Tolerances at cross-section of plastic profile to DIN2768, tolerance class m.
Tolerances and sizes of steel C-profiles, see pp 135-136. Properties of materials, see pg 14.

● ex stock
○ at short notice on request

Type FR (Original Material "S"® black antistatic)

Guides for V-Belts

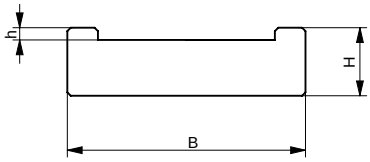

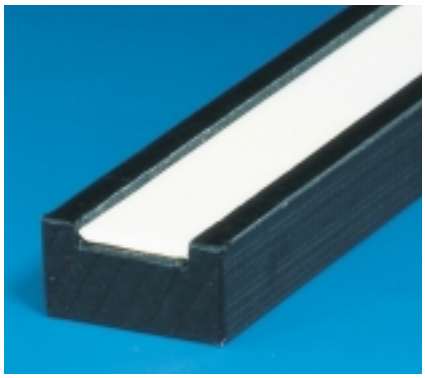

Belt type	B mm	H mm	h mm	Weight kg/m	Length belt guide (tolerance +0/+7) mm	Part no.	Avail-ability
25/T 5	35	10	1.8	0.29	2000	231 010 014	●
32/T 5	45	12	1.8	0.45	2000	231 010 015	●
25/T10	35	12	3.8	0.30	2000	231 010 016	●
32/T10	45	12	3.8	0.39	2000	231 010 017	●
50/T10	65	15	3.8	0.73	2000	231 010 018	●
75/T10	90	15	3.8	1.00	2000	231 010 019	●
100/T10	115	18	3.8	1.59	2000	231 010 020	●

Special sizes/designs, other technical or high-performance materials on request.
Intermediate sizes available at short notice and charged at full meter prices.
Tolerances at cross-section of profile to DIN2768, tolerance class m. Properties of materials, see pg 14.

● ex stock
○ at short notice on request

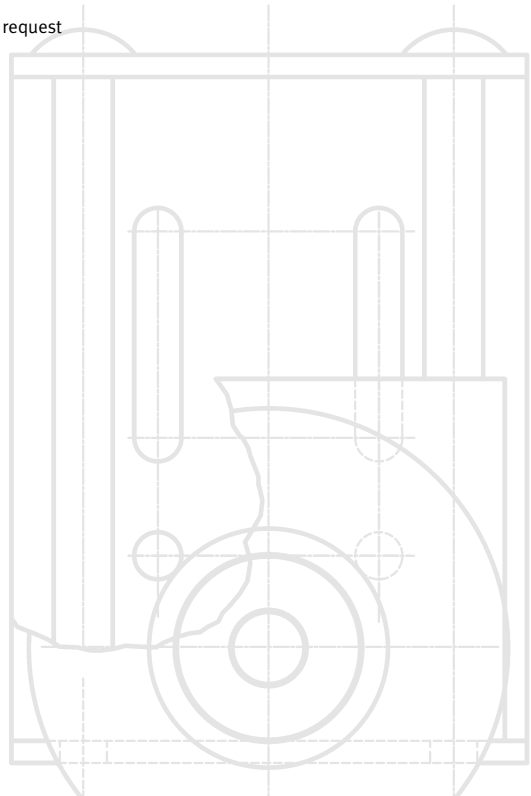

Type FRC (Original Material "S"® black antistatic)

Guides with Steel C-Profile for Flat Belts

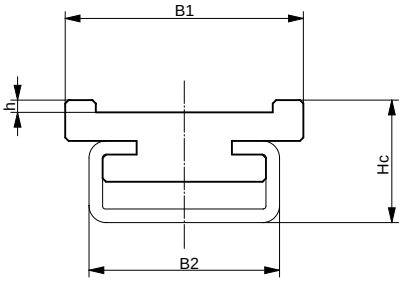

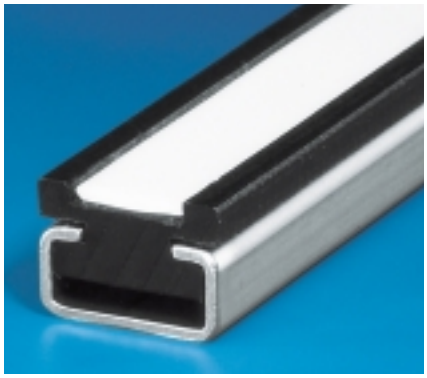

Belt type	C-profile type	B_1 mm	B_2 mm	H_C mm	h mm	Weight kg/m	Length belt guide (tolerance +0/+7) mm	Length steel C-profile (tolerance +0/+40) mm	Part no.	Availability
25/T 5	C5	35	28	18	1.8	1.13	2000	2000 6000	231 110 222 231 110 322	● ●
32/T 5	C5	45	28	18	1.8	1.17	2000	2000 6000	231 110 223 231 110 323	● ●
25/T10	C5	35	28	20	3.8	1.17	2000	2000 6000	231 110 224 231 110 324	● ●
32/T10	C5	45	28	20	3.8	1.22	2000	2000 6000	231 110 225 231 110 325	● ●
50/T10	C4	65	50	20	3.8	1.91	2000	2000 6000	231 110 226 231 110 326	● ●
75/T10	C6	90	80	20	3.8	2.78	2000	2000 6000	231 110 227 231 110 327	● ●
100/T10	C6	115	80	20	3.8	2.93	2000	2000 6000	231 110 228 231 110 328	● ●

Special sizes/designs, other technical or high-performance materials on request.
Steel C-profile in stainless steel (V2A) also available ex stock.
Belt guides also available without steel C-profile.
Intermediate sizes available at short notice and charged at full meter prices.

Tolerances at cross-section of plastic profile to DIN2768, tolerance class m.
Tolerances and sizes of steel C-profiles, see pp 135-136. Properties of materials, see pg 14.

● ex stock
○ at short notice on request

Typ FK (Original Material "S"® black antistatic)

Guides for Flat V-Belts

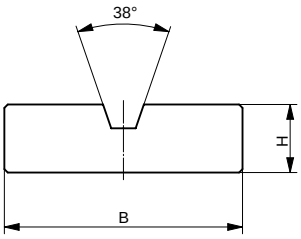

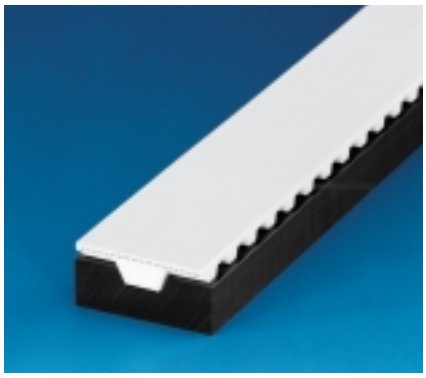

Belt type	B mm	H mm	Weight kg/m	Length belt guide (tolerance +0/+7) mm	Part no.	Avail-ability
25/TK 5	28	10	0.25	2000	231 010 021	●
32/TK 5	35	10	0.31	2000	231 010 022	●
32/TK10	35	12	0.36	2000	231 010 023	●
50/TK10	55	12	0.59	2000	231 010 024	●
75/TK10	80	15	1.07	2000	231 010 025	●
100/TK10	105	15	1.43	2000	231 010 026	●

Special sizes/designs, other technical or high-performance materials on request.
Intermediate sizes available at short notice and charged at full meter prices.
Tolerances at cross-section of profile to DIN2768, tolerance class m.
Properties of materials, see pg 14.

● ex stock
○ at short notice on request

Type FKC (Original Material "S"® black antistatic)

Guides with Steel C-Profile for Flat V-Belts

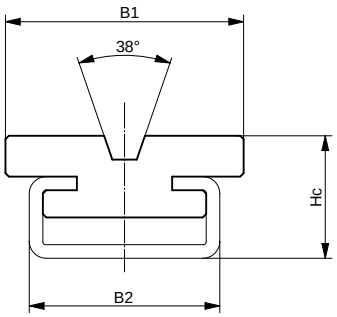

Belt type	C-profile type	B_1 mm	B_2 mm	H_c mm	Weight kg/m	Length belt guide (tolerance +0/+7) mm	Length steel C-profile (tolerance +0/+40) mm	Part no.	Availability
25/TK 5	C5	28	28	18	1.12	2000	2000 6000	231 110 229 231 110 329	● ●
32/TK 5	C5	35	28	18	1.16	2000	2000 6000	231 110 230 231 110 330	● ●
32/TK10	C5	35	28	18	1.14	2000	2000 6000	231 110 231 231 110 331	● ●
50/TK10	C4	55	50	18	1.82	2000	2000 6000	231 110 232 231 110 332	● ●
75/TK10	C6	80	80	18	2.70	2000	2000 6000	231 110 233 231 110 333	● ●
100/TK10	C6	105	80	18	2.89	2000	2000 6000	231 110 234 231 110 334	● ●

Special sizes/designs, other technical or high-performance materials on request.
Steel C-profile in stainless steel (V2A) also available ex stock.
Belt guides also available without steel C-profile.
Intermediate sizes available at short notice and charged at full meter prices.

Tolerances at cross-section of plastic profile to DIN2768, tolerance class m.
Tolerances and sizes of steel C-profiles, see pp 135-136. Properties of materials, see pg 14.

● ex stock
○ at short notice on request

45
R69
R35
A

17
5
25.5

Steel C-Profiles and Fixing Bolts

A Selection of our Steel C-Profiles combined with Profiles Material ”S”®

Type CKG

Type CT

Type CT + CKG

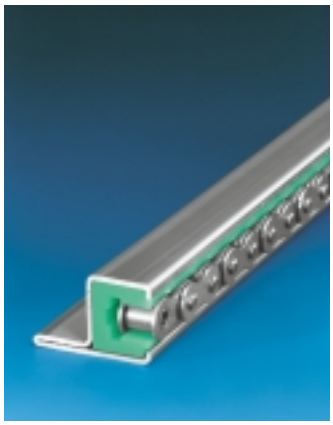

Type CKG 14H

Type CKG 15V

Type CTS

Type CTU + CT

Steel C-Profiles

galvanized or stainless steel

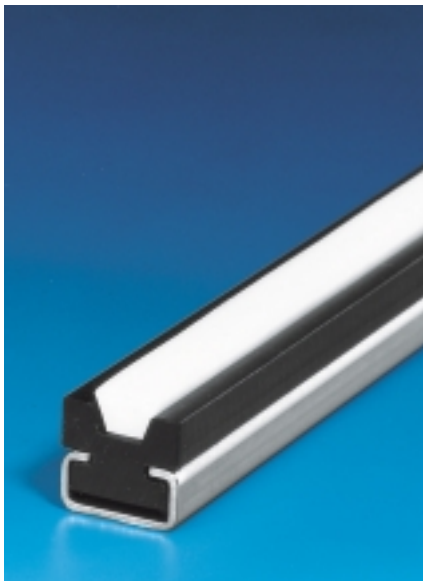

Thermoplastics subject to temperature fluctuations have a significantly higher coefficient of linear expansion than metals. That is why, for some applications, it is better for plastic guides to be held in place by a steel C-profile. (It also makes it easier and faster to replace them.)

In many cases, steel profiles are in fact indispensable both for fixing and stabilizing purposes and can be welded or bolted-on where appropriate.

Basically we recommend DIN bolts or – a special method – T-head bolts. For details of how to install steel C-profiles using T-head bolts, please see pg 140.

Steel C-profiles are available ex stock galvanized or in stainless steel or, on request, in 'black' (untreated surface).

All the advantages of steel C-profiles at a glance:

- easy assembly and dismantling of guide system
- steel C-profiles only need through holes to be drilled
- easy alignment of guide system
- no distortion of steel C-profile during assembly
- as the plastic guide runs free within the steel C-profile, it can expand and contract in line with temperature fluctuations
- easy replacement of plastic guides due to wear.

Standard Range of Steel C-Profiles to DIN59413

2000mm length, 6000mm length

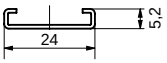

C1

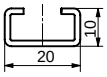

C3

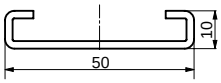

C4

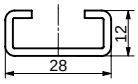

C5

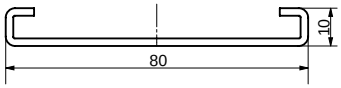

C6

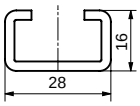

C7

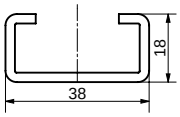

C9

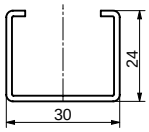

C10

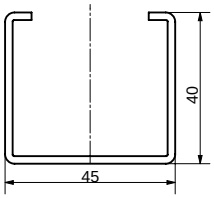

C11

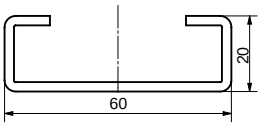

C12

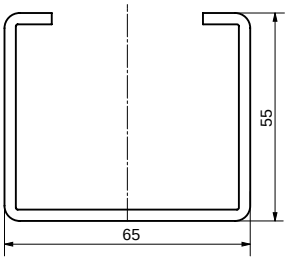

C13

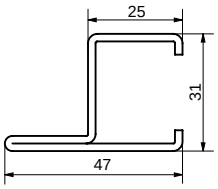

C14 H

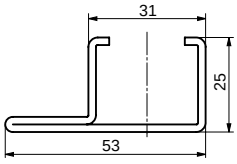

C15 V

Selection Chart

Steel C-Profiles, galvanized or stainless steel

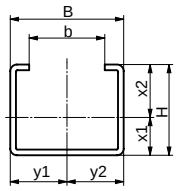

C 1 - C 13

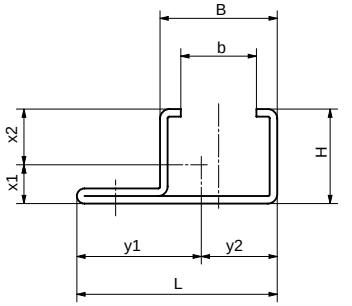

C 14H

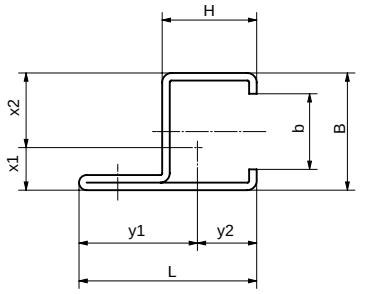

C 15V

Profile no.	B	b	H	s	L	Centre of gravity (profile) cm		Section modulus cm^3				Moment of inertia cm^4		Weight kg/m	Length steel C-profile mm	Part no. Send. galv.	Part no. V2A
						x_1	y_1	w_{x1}	w_{x2}	w_{y1}	w_{y2}	I_x	I_y				
C1	24	17.5	5.2	1.0	–	0.15	1.20	0.06	0.03	0.22	0.22	0.01	0.26	0.28	2000 6000	351 020 001 351 060 001	351 020 101 351 060 101
C3	20	10	10.0	1.5	–	0.41	1.00	0.21	0.14	0.37	0.37	0.09	0.37	0.49	2000 6000	351 020 003 351 060 003	351 020 103 351 060 103
C4	50	35	10.0	2.0	–	0.31	2.50	0.54	0.25	1.93	1.93	0.17	4.84	1.18	2000 6000	351 020 004 351 060 004	351 020 104 351 060 104
C5	28	14	12.0	2.0	–	0.43	1.40	0.41	0.23	0.84	0.84	0.18	1.18	0.86	2000 6000	351 020 005 351 060 005	351 020 105 351 060 105
C6	80	65	10.0	2.0	–	0.31	4.00	0.64	0.29	4.04	4.04	0.20	16.14	1.66	2000 6000	351 020 006 351 060 006	351 020 106 351 060 106
C7	28	14	16.0	2.5	–	0.65	1.40	0.77	0.53	1.25	1.25	0.50	1.75	1.18	2000 6000	351 020 007 351 060 007	351 020 107 351 060 107
C9	38	22	18.0	2.5	–	0.69	1.90	1.91	0.74	2.17	2.17	0.82	4.12	1.49	2000 6000	351 020 009 351 060 009	351 020 109 351 060 109
C10	30	20	24.0	1.5	–	0.93	1.50	0.97	0.61	1.24	1.24	0.90	1.86	0.96	2000 6000	351 020 010 351 060 010	351 020 110 351 060 110
C11	45	31	40.0	2.0	–	1.55	2.25	3.41	2.16	4.09	4.09	5.29	9.20	2.07	2000 6000	351 020 011 351 060 011	351 020 111 351 060 111
C12	60	36	20.0	2.5	–	0.70	3.00	2.20	1.19	4.74	4.74	1.54	14.23	2.17	2000 6000	351 020 012 351 060 012	351 020 112 351 060 112
C13	65	40	55.0	3.0	–	2.17	3.25	6.41	4.19	5.56	5.56	13.93	18.07	4.34	2000 6000	351 020 013 351 060 013	351 020 113 351 060 113
C14	31	20	25.0	2.0	47	1.09	2.46	3.81	2.06	1.50	1.65	4.14	3.69	1.87	2000 6000	351 020 014 351 060 014	351 020 114 351 060 114
C15	31	20	25.0	2.0	53	1.79	2.84	0.93	2.33	2.48	2.86	1.66	7.04	1.90	2000 6000	351 020 015 351 060 015	351 020 115 351 060 115

Intermediate sizes available at short notice and charged at full meter prices.

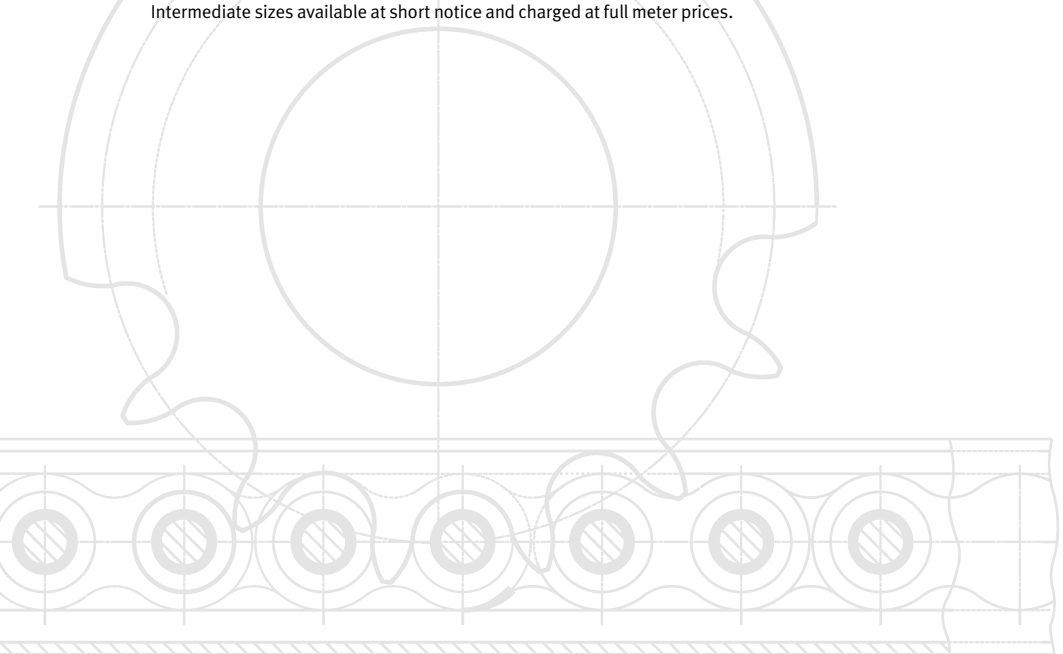

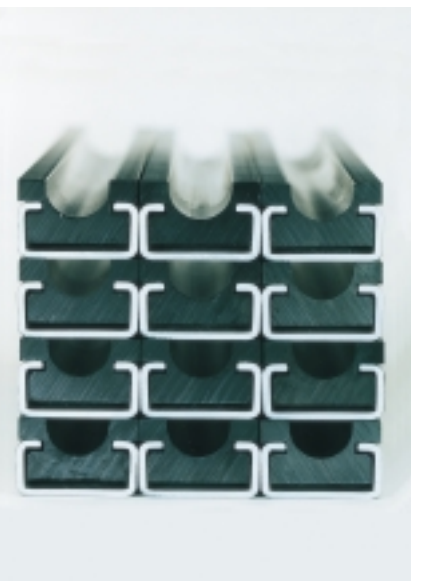

How to Design Guides Made from Plastic

with / without steel C-profile

First, please take a moment to consider these questions:

What do want from your guide?

- static and dynamic loads
- operating temperature
- environmental influences (chemicals/contamination)
- contact with food
- fixing method

Which shapes and sizes do your answers suggest?

Please ask us to fax you our design sheets – they make sketching your preferred guide easier. For examples of special profiles, please see pp 143–145.

To select the correct tolerances for plastics, please ask us for additional documentation on production tolerances. All the information is also available on our website at **www.murtfeldt.de**

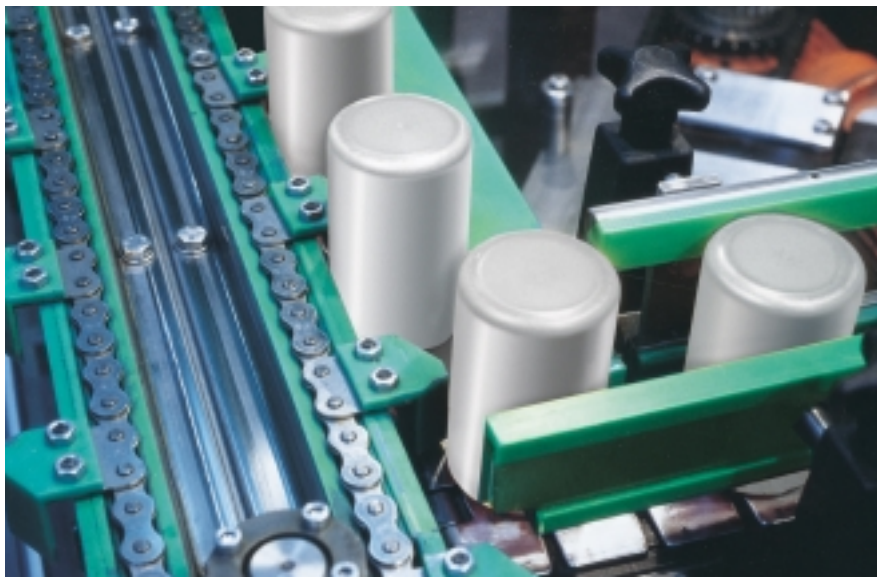

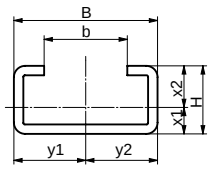

profile C 9

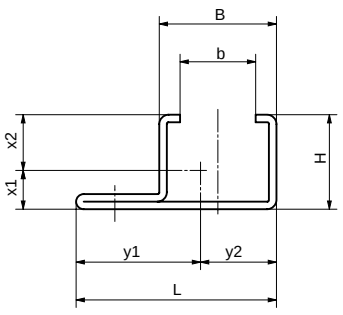

profile C 15V

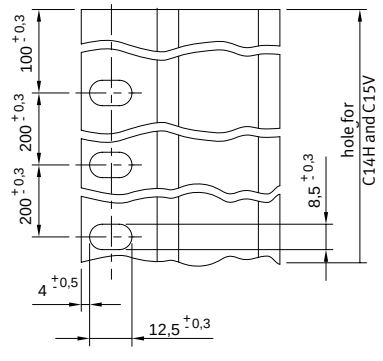

Holes for C 14H and C 15V.
Steel profiles C 14H and C 15V with holes in fixing rail.

Dimensional tolerance for first hole applies only to standard-size ends of 2000/6000mm. Dimensional tolerances for intermediate sizes may vary.

Profile tolerance to DIN59413
Linear tolerance to + 0/+ 40mm

The Coefficient of Linear Expansion and Its Rôle in Design for Plastics

How to calculate the coefficient of linear expansion

Thermoplastics have a higher thermal coefficient of linear expansion than materials made from metal. That is why guides made from plastics must be fixed in a way which allows them to expand lengthways.

When calculating their expansion, please take into account the anticipated difference between temperature during assembly and min./max. operating temperatures. Using the coefficient of linear expansion, calculate their max. elongation when subject to heat and their max. linear contraction when subject to cooling.

For calculation examples, please see Appendix *'Tolerances for Machining Plastics'* (or see calculation below). Depending on the application, various fixing methods are available. These are described on the following pages. In every case, their guiding principle is to allow the plastics material to expand and contract when subject to temperature fluctuations.

Chain/belt/goods conveyed travelling in one direction only:
During expansion, the plastic guide backs up against the direction of conveyor travel. Therefore, sufficient space for its anticipated expansion should be allowed at its start.

How to calculate displacement
$\Delta l = l \cdot \alpha \cdot \Delta t$

where Δl = displacement
l = initial length
α = linear thermal coefficient of expansion
see pg 19, line 25
Δt = temperature difference in C°
please note:
Δt = upper temperature – installation temperature
lower temperature – installation temperature
please state +/- for ΔT

Ill. 1

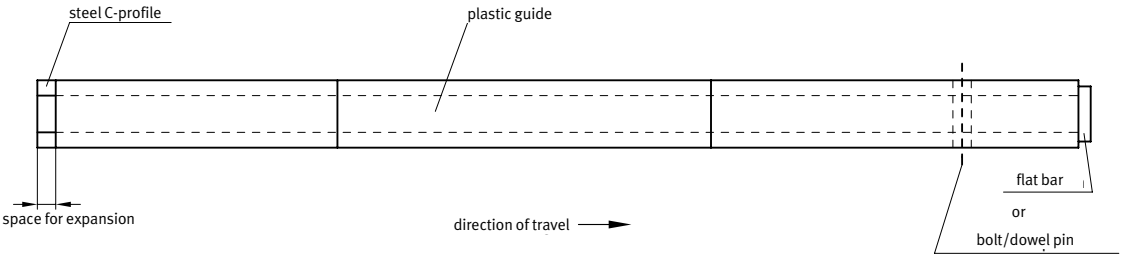

Chain/belt/goods conveyed travelling in one or alternating directions:

Ill. 2

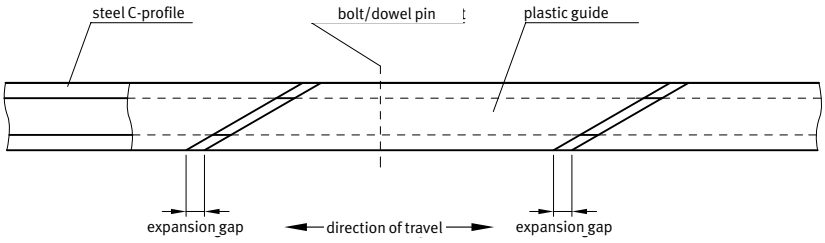

Fixing Methods for Guides without Steel C-Profiles

By bolts
A positive-type connection using bolts is an obvious but problematic fixing method:
For a start, bolt heads reduce material strength. What is more, each guide should be bolted only once. Since it is not laterally stabilized, each guide must also be fixed laterally. And, in each case, a 45° expansion gap to the nearest rail must be provided, see Ill. 2 on pg 137.

Some limited expansion would thus be possible. Compared to other fixing methods, however, the risk of lateral shifting and 'lifting' remains. In most cases, replacing the guides would also be labour-intensive.

Murtfeldt recommends steel C-profiles to fix plastic guides!

By T-slot cutting
Cutting a T-slot into plastic guides to hold flat bars or bolt heads is easy.

First bolt or weld the flat bar into position. (Alternatively, fit and tighten fixing bolts with a distance sleeve.) Then simply slide the plastic guide with its pre-cut slot over it.

For security, an end stop bolt/plate or similar may be fitted in the direction of conveyor travel.

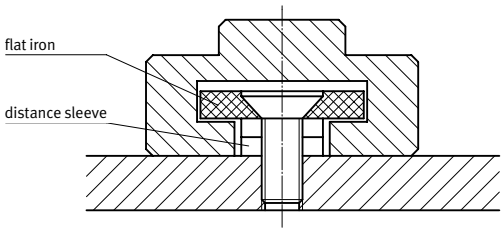

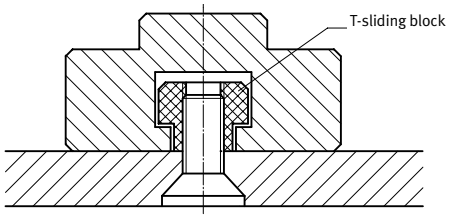

Fixing Methods for Guides with Steel C-Profiles

As a rule, a particularly good and cost-effective method is to use steel C-profiles to fix plastic guides. Murtfeldt stocks a total of 13 different types of steel C-profile – specially rolled with our own machine tools – to match a variety of chain and belt guide as well as slide rail arrangements.

Compared to commercially designed profiles, our steel C-profiles offer a significantly smaller, more uniform tolerance zone and thus greater dimensional accuracy than is required under DIN59413. Standard profiles come in either sendzimir galvanized or stainless steel (V2A).

By steel C-profiles with integrated fixing rails

An interesting, low-cost fixing method for plastic guides is to use steel C-profile types CKG 14H and CKG 15V (patented). These profiles are rolled and have an integrated continuous fixing rail with slotted holes at intervals of 200mm for bolts of 8mm diameter. These bolt connections allow easy readjustment and fast correction of alignment errors.

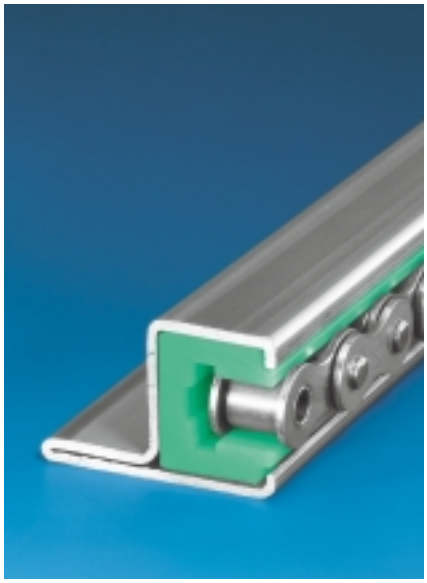

By Steel C-Profiles with T-Head Bolts

We can supply plastic guides with another slot cut into them to hold the bolt head. The nuts are tightened from below during assembly. The slot in the plastic guide also prevents the T-head bolt head from twisting.

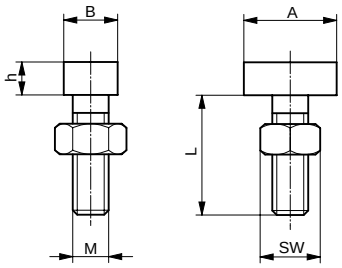

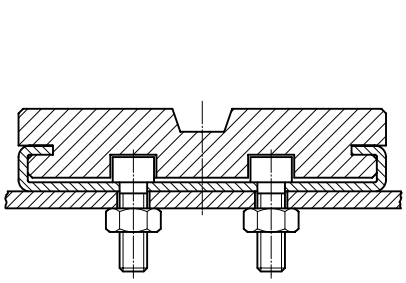

two-track fixing

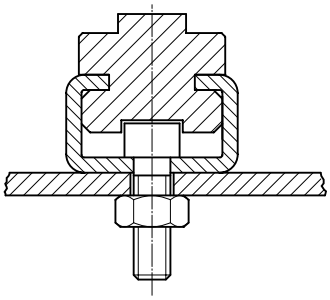

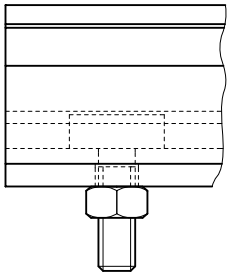

one-track fixing

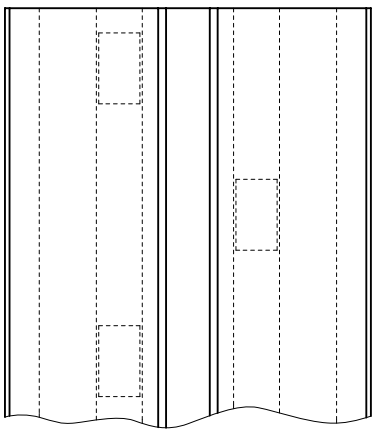

At low cost, we drill or punch fixing holes into steel C-profiles according to the layout you specify.
For T-head bolt sizes, please see pg 141.

T-Head Bolts

galvanized and stainless steel

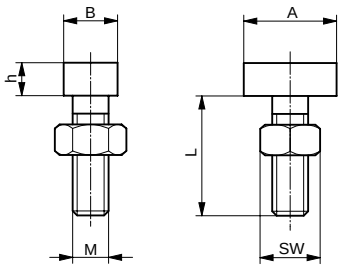

To select the correct T-head bolt, please contact us.

We stock the following T-head bolts in various designs incl. nuts:

	suitable for steel C-profile		Dimensions in mm					
Thread	**one-track**	**two-track**	**A**	**B**	**h**	**L**	**Material**	**Part no.**
M6 x 20	C1, C3, C5, C7, C9, C10	C4, C6, C11, C12, C13	18.0	9.5	4.0	20.0	galvanized	352 010 001
M6 x 20	C1, C3, C5, C7, C9, C11	C4, C6, C11, C12, C14	18.0	9.5	4.0	20.0	V 2 A	352 010 002
M6 x 20	C1, C5, C7, C9	C4, C6, C12	15.5	9.0	5.5 – 6.0	17.0	galvanized	352 010 005
M6 x 20	C1, C5, C7, C9	C4, C6, C12	23.0	10.5	5.5 – 6.0	16.0	galvanized	352 010 009
M6 x 30	C1, C5, C7, C9	C4, C6, C12	15.5	9.0	5.5 – 6.0	29.0	galvanized	352 010 003
M6 x 30	C1, C5, C7, C9	C4, C6, C12	23.0	10.5	5.5 – 6.0	28.0	galvanized	352 010 018
M6 x 40	C1, C5, C7, C9	C4, C6, C12	15.5	9.0	5.5 – 6.0	39.0	galvanized	352 010 004
M6 x 40	C1, C5, C7, C9	C4, C6, C12	23.0	10.5	5.5 – 6.0	37.0	galvanized	352 010 010
M8 x 20	C4, C7, C9	C4, C6, C12	15.5	9.0	5.5 – 6.0	19.0	galvanized	352 010 008
M8 x 20	C4, C7, C9	C4, C6, C12	23.0	10.5	5.5 – 6.0	18.0	galvanized	352 010 011
M8 x 20	C4, C7, C9	C4, C6, C12	15.5	9.0	5.5	17.0	V 2 A	352 010 025
M8 x 30	C4, C7, C9	C4, C6, C12	15.5	9.0	5.5 – 6.0	29.0	galvanized	352 010 006
M8 x 30	C4, C7, C9	C4, C6, C12	23.0	10.5	5.5 – 6.0	29.0	galvanized	352 010 019
M8 x 30	C4, C7, C9	C4, C6, C12	15.5	9.0	5.5	27.0	V 2 A	352 010 026
M8 x 30	C4, C7, C9	C4, C6, C12	23.0	10.0	5.5 – 6.0	27.0	V 2 A	352 010 028
M8 x 40	C4, C7, C9	C4, C6, C12	15.5	9.0	5.5 – 6.0	39.0	galvanized	352 010 007
M8 x 40	C4, C7, C9	C4, C6, C12	23.0	10.5	5.5 – 6.0	38.0	galvanized	352 010 014
M8 x 40	C4, C7, C9	C4, C6, C12	15.5	9.0	5.5	38.0	V 2 A	352 010 027
M10 x 20	C9, C12	C6, C12	31.0	13.5	9.0 – 9.5	17.0	galvanized	352 010 015
M10 x 20	C7, C9, C11, C12, C13	C4, C6, C12	23.0	10.5	6.5 – 7.0	18.0	galvanized	352 010 020
M10 x 30	C7, C9, C11, C12, C13	C4, C6, C12	23.0	10.5	6.5 – 7.0	29.0	galvanized	352 010 012
M10 x 30	C9, C12	C6, C12,	31.0	13.5	9.0 – 9.5	27.0	galvanized	352 010 016
M10 x 40	C7, C9, C11, C12, C13	C4, C6, C12	23.0	10.5	6.5 – 7.0	38.0	galvanized	352 010 013
M12 x 40	C11, C12, C13	C6, C12, C13	31.0	13.5	9.5 – 10.0	36.0	galvanized	352 010 017

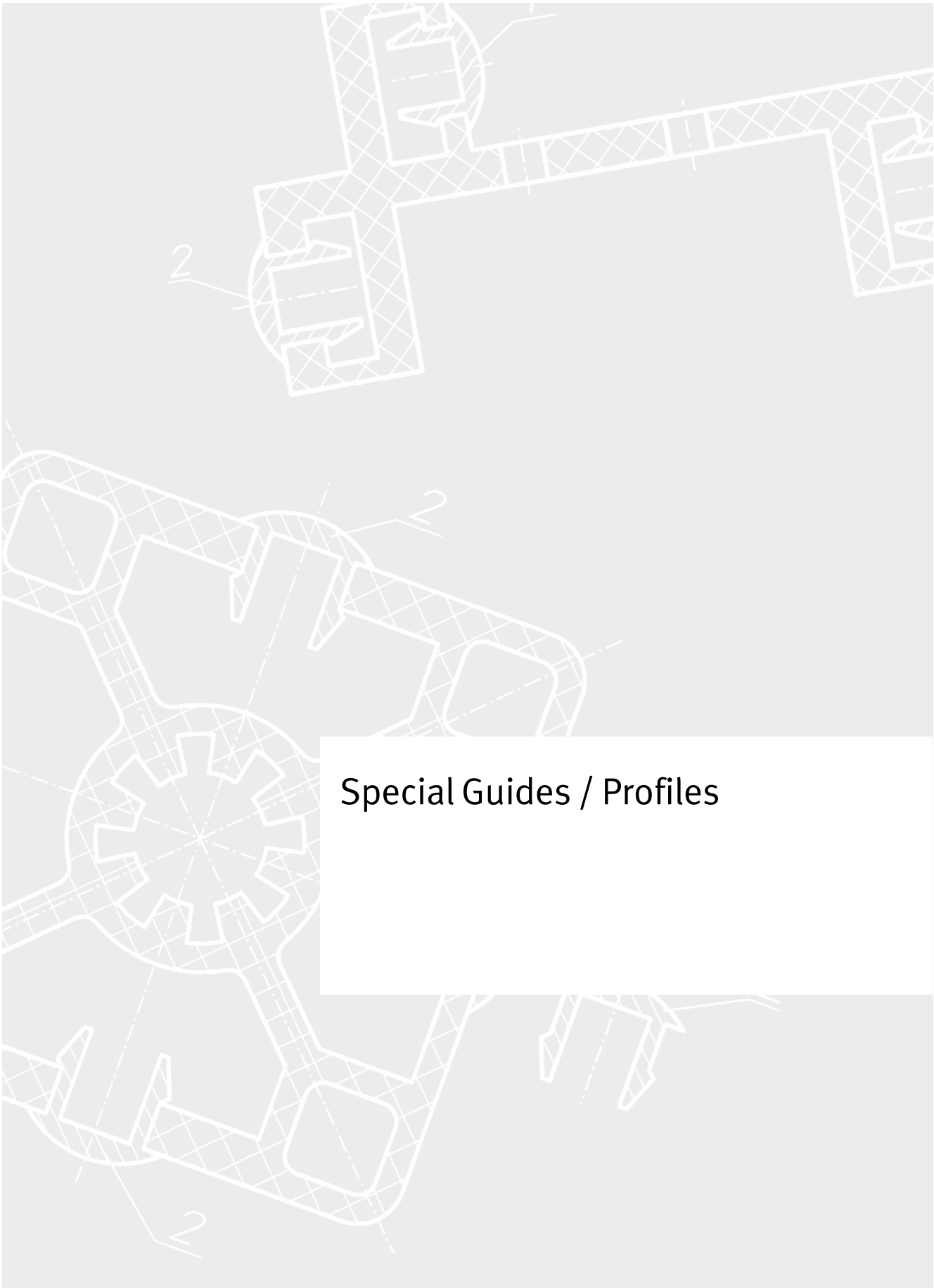

Special Guides / Profiles

Special Guides / Profiles

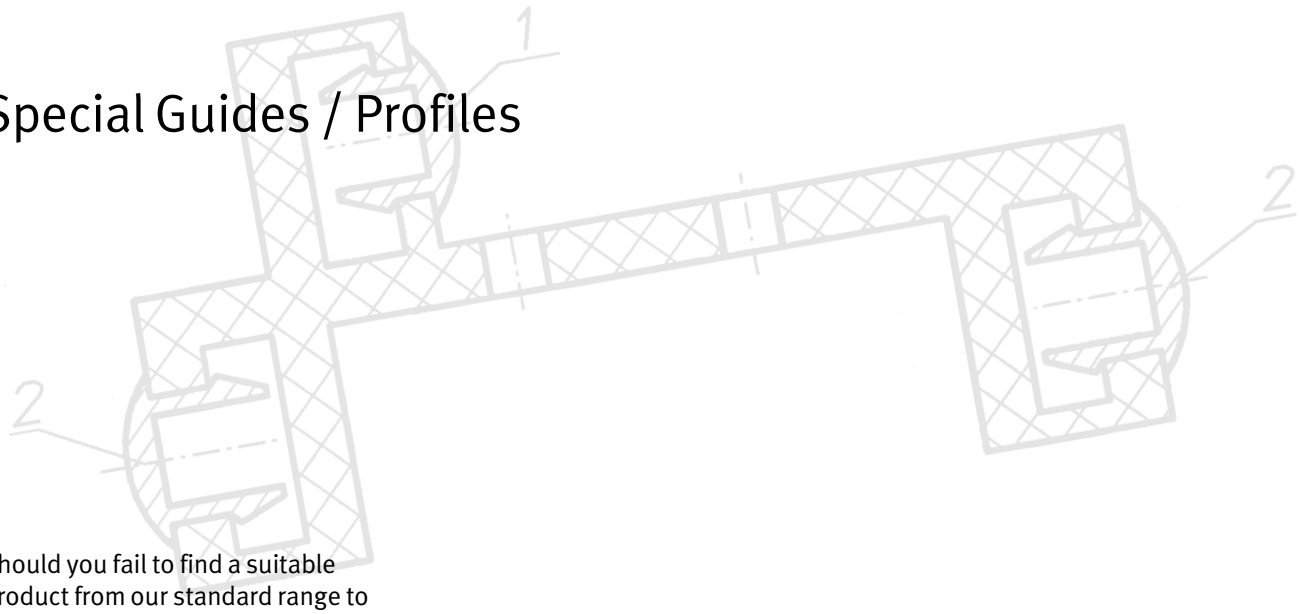

Should you fail to find a suitable product from our standard range to solve your problem, our hi-tech production technologies enable us to offer you low-cost solutions for guides, profiles, tensioners or finished products (both as one-offs and small runs) tailored to meet your individual demands.

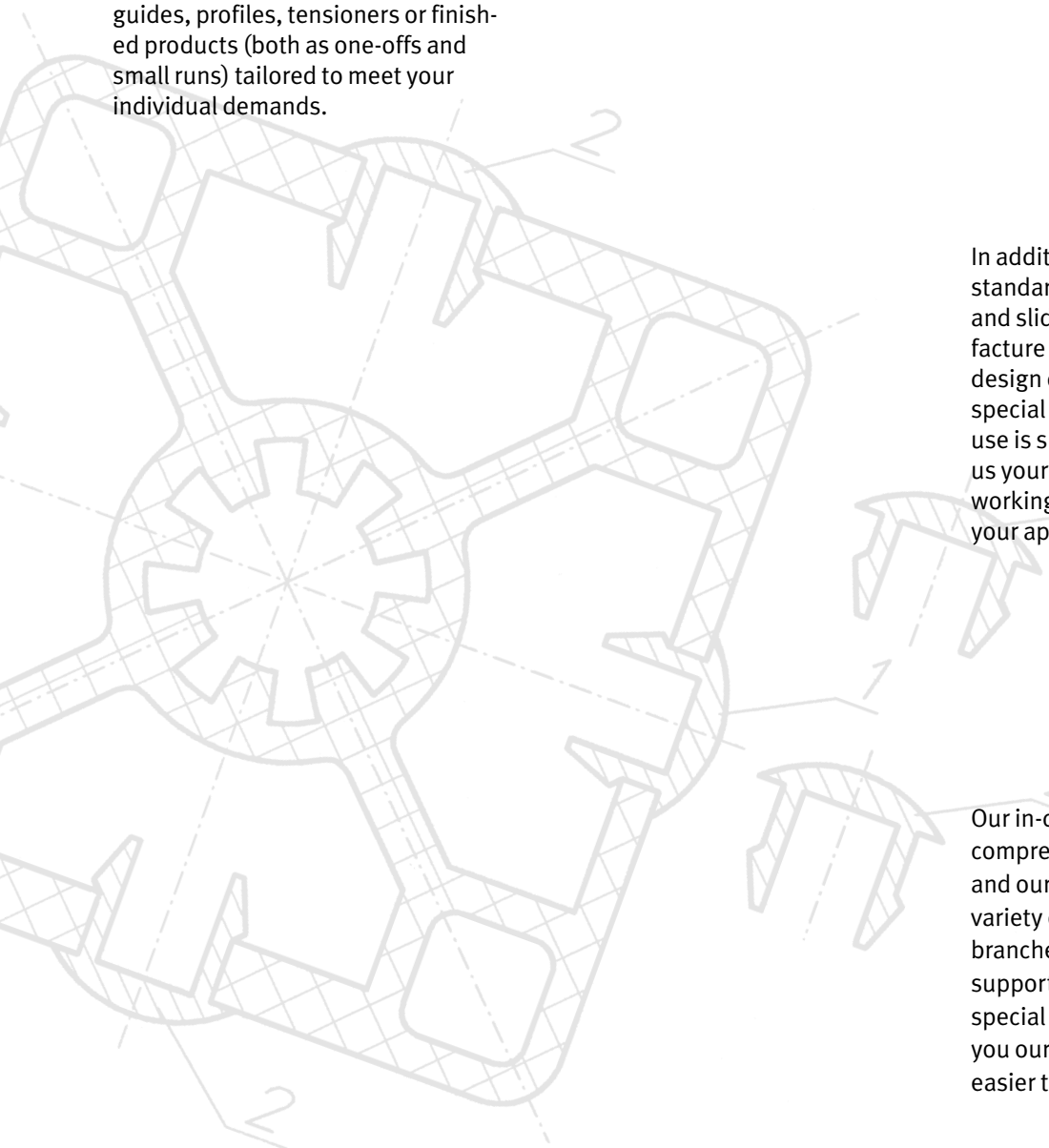

In addition to our broad range of standard chain guides, belt guides and slide profiles, we can also manufacture special profiles to your own design drawings. A selection of special profiles already in successful use is shown on the right. Please set us your task – we look forward to working out a solution specific to your application.

Our in-depth knowledge of materials, comprehensive production know-how and our experience based on a wide variety of applications in virtually all branches of industry enable us to support you in developing your own special solutions. Please ask us to fax you our design sheets to make it easier to sketch your preferred guide.

A Selection of Special Profiles

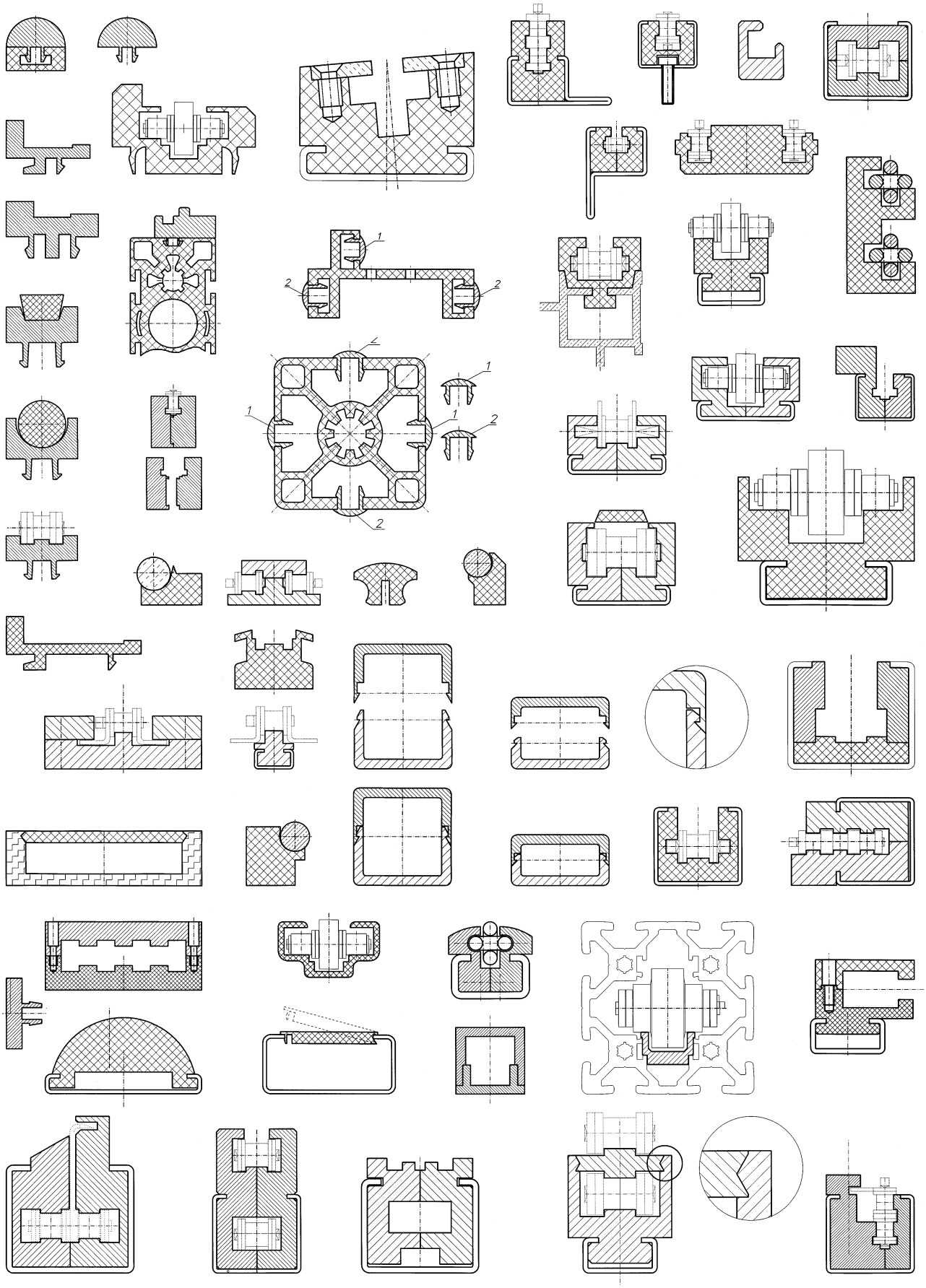

97.5
5
5
12
21
26
33
12
61.5
(1)
10
"D"
60°
90°
22.5
3
7
1
26
M5 15tief

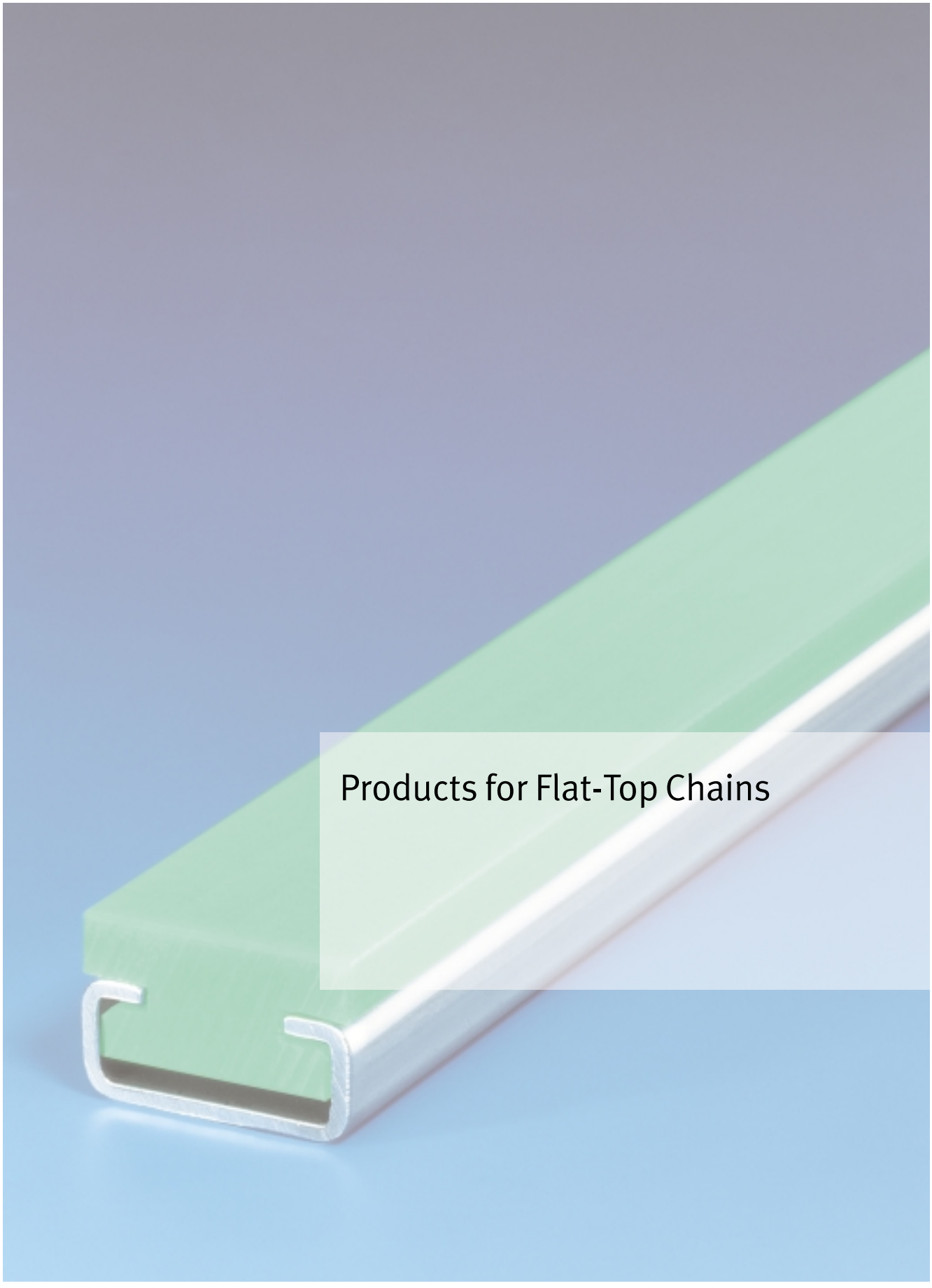

Products for Flat-Top Chains

ø12.5
30°
30°
ø79.5
ø55+0.2 +0.1

Products for Flat-Top Chains

Murtfeldt's developments of special products for conveyor systems, for materials to slide smoothly on conveyor lines and for general support and lateral control in materials handling have benefited a wide variety of applications.

Today's automated production processes demand innovative solutions even for small runs.

Murtfeldt meets that demand and thus contributes to the trouble-free running of your installation.

Slide Rails Type CF (Original Material "S"® green)

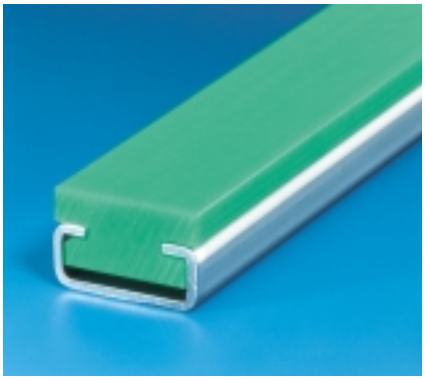

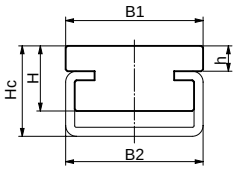

Universal slide rail for use in lateral, upper and lower applications for guiding products and conveyors.

Type	C-profile type	B_1 mm	B_2 mm	H mm	Hc mm	h mm	Weight kg/m	Length chain guide (tolerance +0/+7) mm	Length steel C-profile (tolerance +0/+40) mm	Part no.	Availability
CF	C1	20	24	5	6	1.0	0.350	2000	2000 6000	211 010 201 211 010 301	● ●
CF	C1	20	24	10	11	5.8	0.450	2000	2000 6000	211 010 202 211 010 302	● ●
CF	C3	20	20	10	14	4.0	0.790	2000	2000 6000	211 010 203 211 010 303	● ●
CF	C3	20	20	14	17	7.0	0.880	2000	2000 6000	211 010 204 211 010 304	● ●
CF	C3	20	20	16	20	10.0	0.940	2000	2000 6000	211 010 205 211 010 305	● ●
CF	C5	28	28	10	15	3.0	1.180	2000	2000 6000	211 010 206 211 010 306	● ●
CF	C5	28	28	14	18	6.0	1.320	2000	2000 6000	211 010 207 211 010 307	● ●
CF	C9	38	38	12	22	4.0	2.200	2000	2000 6000	211 010 208 211 010 308	● ●
CF	C9	38	38	18	25	7.0	2.500	2000	2000 6000	211 010 209 211 010 309	● ●
CF	C12	60	60	20	30	10.0	3.300	2000	2000 6000	211 010 210 211 010 310	● ●

All slide rails are available in Original Material "S"® green or Material "S"® 1000.
Please order as follows:
Example:
Slide rails in Original Material "S"®, green with steel C-profile, galvanized
Part no.: 211 0**1**0 201
Slide rails in Material "S" 1000®, green with steel C-profile, galvanized
Part no.: 211 0**2**0 201
Special sizes/designs, other technical or high-performance materials on request.

Steel C-profile in stainless steel (V2A) also available ex stock.
Slide rails also available without steel C-profile.
Special profiles, see pp 143–145.
Intermediate sizes available at short notice and charged at full meter prices. Tolerances at cross-section of plastic profile to DIN2768, tolerance class m.
Tolerances and sizes of steel C-profiles, see pp 135–136. Properties of materials, see pg 14.

● ex stock
○ at short notice on request

Tapes and Profiles for Flat-Top Chains

(Original Material "S"®)
milled/extruded

Wherever goods and materials need to be handled carefully and with low driving forces, plastic tapes made from Original Material "S"® green are used, especially in the beverage, packaging, food and frozen food industries.

These tapes are also available in Original Material "S"® black antistatic; both versions come in milled or extruded qualities as standard. Tapes milled from the solid are particularly wear resistant and offer high notched bar impact strength.

Our standard range comes in thicknesses of 3, 4 and 5mm and in lengths of 50, 65 and 80m. Extruded tapes in overlengths are available on request. Thicknesses of 6, 8 and 10mm can be made to widths of between 10 and 60mm.

Intermediate and special sizes to your specification are available on request, as are pretreated tapes (scraped or flamed on one side) for subsequent bonding.

If you would like to know more about the production processes of both tapes and their specific differences, please contact us – we will be pleased to assist you further.

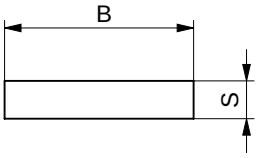

Tapes made from Original Material "S"®

Width (B) x Thickness (S)	Length of roll m	Part no.
15 x 3	80	171 010 007
18 x 3	80	171 010 008
20 x 3	80	171 101 009
22 x 3	80	171 101 010
25 x 3	80	171 101 011
30 x 3	80	171 101 012
35 x 3	80	171 101 013
40 x 3	80	171 101 014
45 x 3	80	171 101 016
50 x 3	80	171 101 017
60 x 3	80	171 101 019
70 x 3	80	171 101 020
80 x 3	80	171 101 021
90 x 3	80	171 101 023
100 x 3	80	171 101 024
111 x 3	80	171 101 025

Width (B) x Thickness (S)	Length of roll m	Part no.
20 x 4	65	171 010 026
25 x 4	65	171 010 027
30 x 4	65	171 010 028
40 x 4	65	171 010 030
50 x 4	65	171 010 032

Width (B) x Thickness (S)	Length of roll m	Part no.
15 x 5	50	171 010 034
18 x 5	50	171 010 035
20 x 5	50	171 010 036
22 x 5	50	171 010 037
25 x 5	50	171 010 038
30 x 5	50	171 010 039
35 x 5	50	171 010 040
40 x 5	50	171 010 041
45 x 5	50	171 010 042
50 x 5	50	171 010 043
60 x 5	50	171 010 044

Tolerances according to DIN2768, tolerance class g. Intermediate sizes available at short notice and charged at full meter prices.

Profiles for Flat-Top Chains (Original Material "S"®)

milled/extruded

L-profile 20 x 5.5

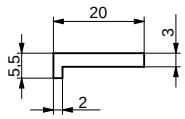

L-profile 20 x 6

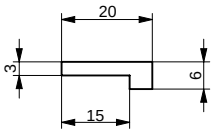

L-profile 25 x 6

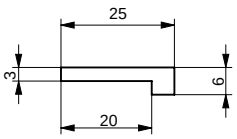

Profile	Length of roll/profile m	Type	Original Material"S"®	Part no. (milled)	Part no. (extruded)	Availability
L-profile 20 x 5.5	35 50	milled extruded	green	211 310 034	211 310 044	●
L-profile 20 x 6	45	milled	green	211 310 035	–	●
L-profile 25 x 6	45	milled	green	211 310 036	–	●

● ex stock
○ at short notice on request

U-profile 45 x 6

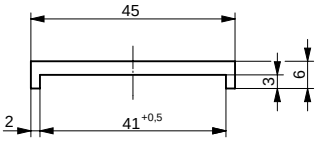

T-profile 40 x 6

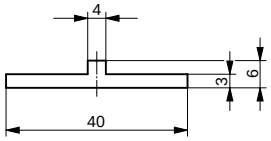

T-profile 40 x 5.5

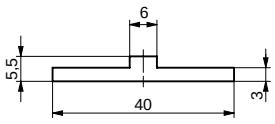

Profile	Length of roll/profile m	Type	Original Material"S"®	Part no. (milled)	Part no. (extruded)	Availability
U-profile 45 x 6	35	milled	green	211310037	–	●
T-profile 40 x 6	35 50	milled extruded	green	211310033	211310042	●
T-profile 40 x 5.5	50	extruded	green	–	211310001	●

Tolerances according to DIN2768 or DIN16942, tolerance class g. Intermediate sizes available at short notice and charged at full meter prices.
Extruded profiles made from Original Material "S"® black are not antistatic.

● ex stock
○ at short notice on request

Bridge-centre-profile 40 x 7.5

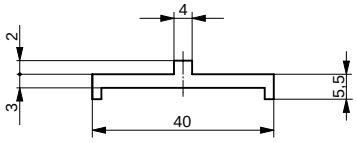

Bridge-centre-profile 45 x 18

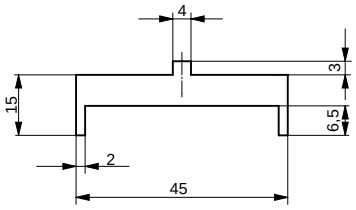

Bridge-centre-profile 46 x 13.5

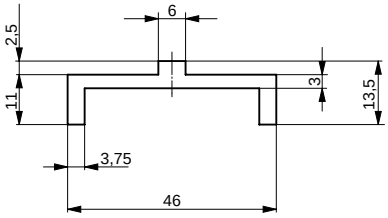

Profile	Length of roll/profile m	Type	Original Material"S"®	Part no. (milled)	Part no. (extruded)	Avail-ability
Bridge-centre profile 40 x 7.5	50	extruded	green	–	211 310 043	●
Bridge-centre profile 45 x 18	6	extruded	green	–	211 310 002	●
Bridge-centre profile 46 x 13.5	6	extruded	green	–	211 310 003	●

● ex stock
○ at short notice on request

Clamp-on flat profile 21 x 9

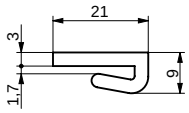

Clamp-on flat profile 18 x 10

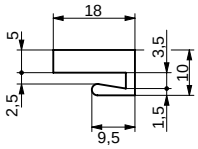

Clamp-on flat profile 26 x 12.3

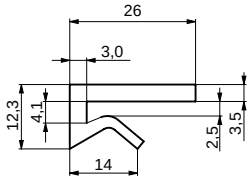

Profile	Length of roll/profile m	Type	Original Material"S"®	Part no. (milled)	Part no. (extruded)	Avail-ability
Clamp-on flat profile 21 x 9	50	extruded	green	–	211 310 004	●
Clamp-on flat profile 18 x 10	50	extruded	black	–	211 310 006	●
Clamp-on flat profile 26 x 12.3	30	extruded	natural	–	211 310 039	●

Tolerances according to DIN2768 or DIN16942, tolerance class g. Intermediate sizes available at short notice and charged at full meter prices.
Extruded profiles made from Original Material "S"® black are not antistatic.

● ex stock
○ at short notice on request

Clamp-on L-profile 21 x 11

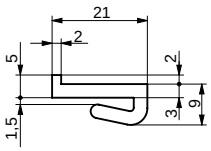

Clamp-on L-profile 16 x 11.5

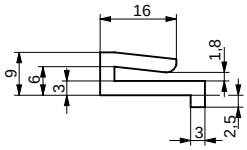

Clamp-on L-profile 26 x 12.3

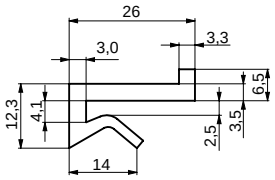

Tape profile	Length of roll/profile m	Type	Original Material"S"®	Part no. (milled)	Part no. (extruded)	Availability
Clamp-on L-profile 21 x 11	50	extruded	green	–	211 310 005	●
Clamp-on L-profile 16 x 11.5	65	extruded	green	–	211 310 041	●
Clamp-on L-profile 26 x 12.3	30	extruded	natural	–	211 310 040	●

● ex stock
○ at short notice on request

Clamp-on U-profile 8.7 x 6.3

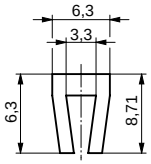

Push-on T-profile 40 x 20.5

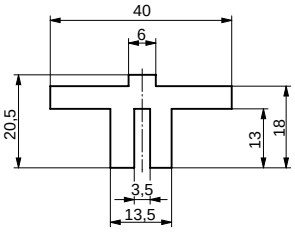

Z-profile 20 x 8

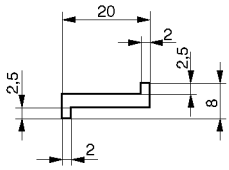

Tape profile	Length of roll/profile m	Type	Original Material"S"®	Part no. (milled)	Part no. (extruded)	Availability
Clamp-on U-profile 8.7 x 6.3	50	extruded	natural	–	211 310 007	●
Push-on T-profile 40 x 20.5	2	milled	green	211 310 030	–	●
Z-profile 20 x 8	35 50	milled extruded	green	211 310 031	211 310 038	●

Tolerances according to DIN2768 or DIN16942, tolerance class g. Intermediate sizes available at short notice and charged at full meter prices.
Extruded profiles made from Original Material "S"® black are not antistatic.

● ex stock
○ at short notice on request

Guide Rails (Original Material "S"®)

milled/extruded

Original Material "S"® shows particularly good slide properties and high abrasion resistance, making it an excellent material for guide rails. Our standard range includes a wide variety either extruded or milled from the solid, both available ex stock. Milled guide rails offer higher wear resistance and toughness, so they tolerate higher loads and last longer.

Should you fail to find a suitable design or size in our standard range, we will be glad to offer you low-cost custom guide rails made to your own specification. Please ask us for a quotation.

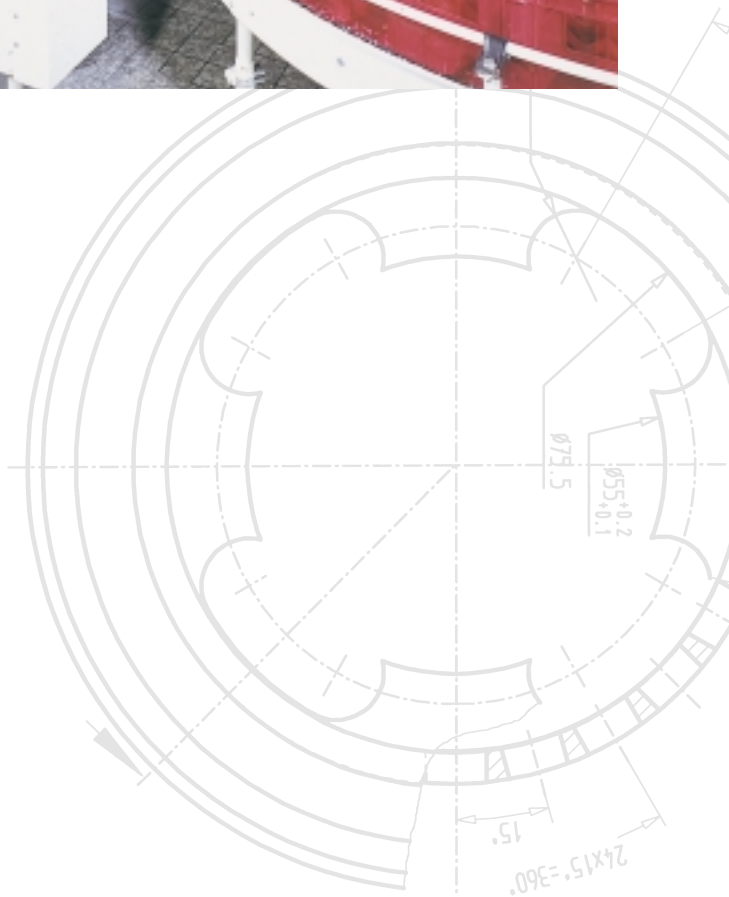

Clip-on Profiles (Original Material "S"®)
milled/extruded

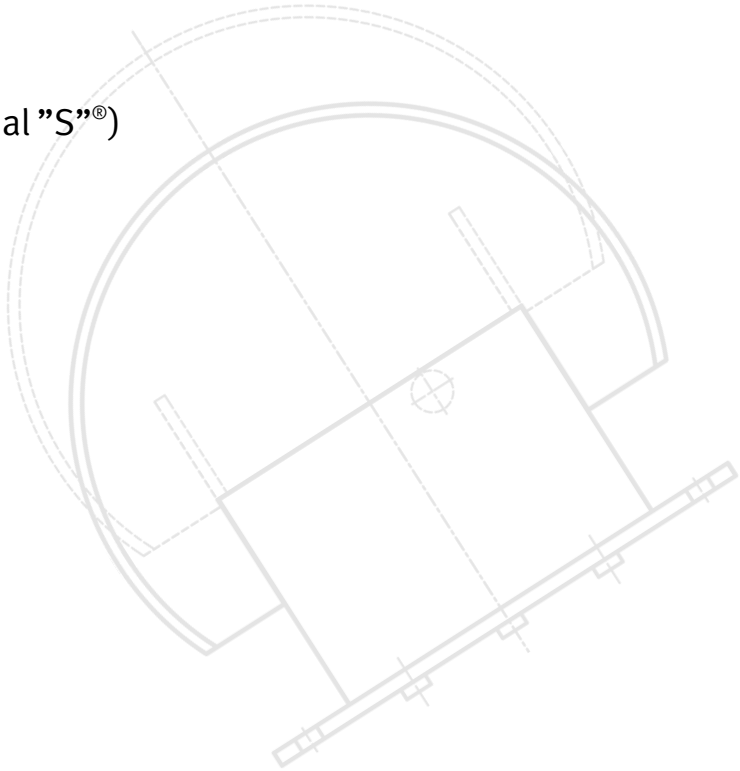

for flat bar 30 x 3
milled/extruded

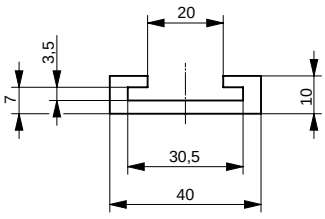

for flat bar 40 x 8
milled

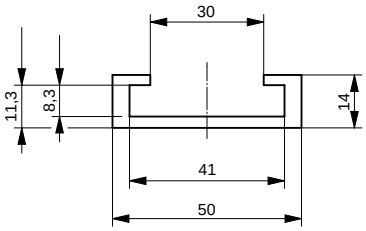

for flat bar 40 x 8
extruded

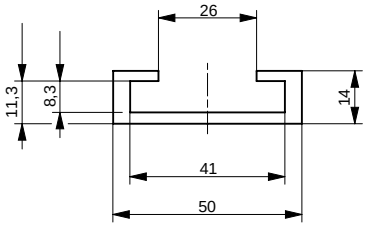

Profile of guide rail	Length m	Type	Original Material "S"®	Part no. milled	Part no. extruded	Avail-ability
plastic C-profile for flat bar 30 x 3	2 2	milled milled	green black antistatic	211 310 016 211 310 020	– _	● ●
plastic C-profile for flat bar 30 x 3	2	extruded	green	–	211 310 024	●
plastic C-profile for flat bar 40 x 8	2 2	milled milled	green black antistatic	211 310 014 211 310 018	– _	● ●
plastic C-profile for flat bar 40 x 8	3	extruded	black	–	211 310 025	●

Tolerances according to DIN2768 or DIN16942, tolerance class g. Intermediate sizes available at short notice and charged at full meter prices.
Extruded profiles made from Original Material "S"® black are not antistatic.

● ex stock
○ at short notice on request

for flat bar 40 x 10 milled

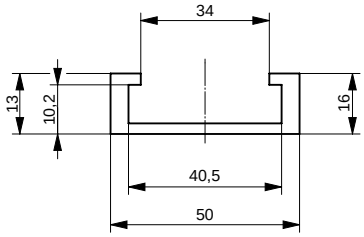

for flat bar 40 x 10 extruded

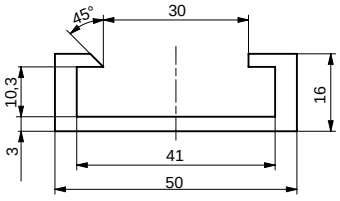

Profile of guide rail	Length m	Type	Original Material"S"®	Part no. milled	Part no. extruded	Avail-ability
plastic C-profile for flat bar 40 x 10	2	milled	green	211 310 022	–	●
	2	milled	black antistatic	211 310 023	–	●
plastic C-profile for flat bar 40 x 10	2	extruded	black	–	211 310 021	●

● ex stock
○ at short notice on request

for flat bar 50 x 6 milled

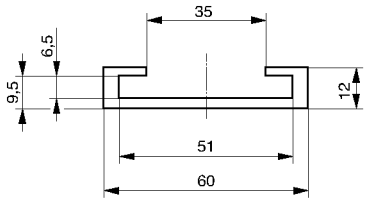

for flat bar 50 x 6 extruded

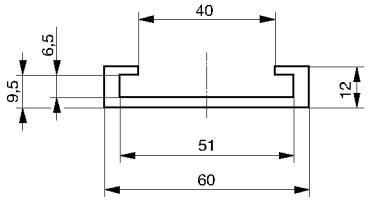

plastic L-profile for flat bar 40 x 8 milled

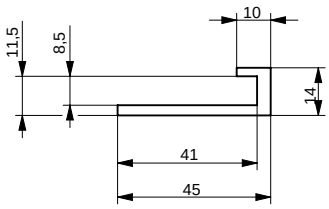

Profile of guide rail	Length m	Type	Original Material"S"®	Part no. milled	Part no. extruded	Avail-ability
plastic C-profile for flat bar 50 x 6	2	milled	green	211 310 013	–	●
	2	milled	black antistatic	211 310 017	–	●
plastic C-profile for flat bar 50 x 6	3	extruded	natural	–	211 310 026	●
plastic L-profile for flat bar 40 x 8	2	milled	green	211 310 015	–	●
	2	milled	black antistatic	211 310 019	–	●

Tolerances according to DIN2768 or DIN16942, tolerance class g. Intermediate sizes available at short notice and charged at full meter prices.
Extruded profiles made from Original Material "S"® black are not antistatic.

● ex stock
○ at short notice on request

Guide Rails as Slide-in and Snap-on Profiles

(Original Material "S"®)
milled/extruded

Mushroom-profile HR 2020

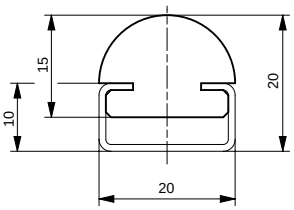

C-trapeze

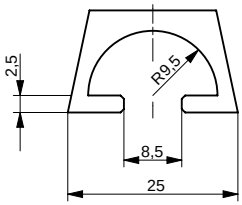

Bone-profile

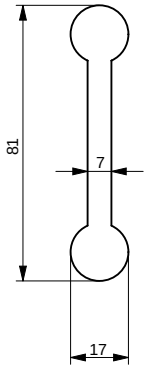

Snap-on 9.5

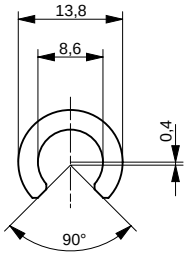

Snap-on 10

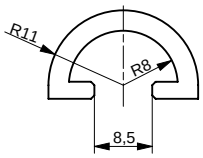

Snap-on 12

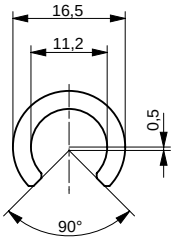

Snap-on 12.5

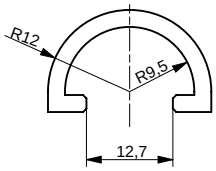

Profile of guide rail	Length of profile m	Type	Original Material"S"®	Part no.	Availability
Mushroom-profile HR 2020	2 2 6	milled milled extruded	green black antistatic green	211 210 301* 211 210 302* 211 210 303*	● ● ●
C-trapeze	2	extruded	natural	211 316 049	●
Bone-profile	6	extruded	green black	211 310 028 211 310 027	● ●
Snap-on 9.5	50	extruded	natural	211 310 045	●
Snap-on 12	50	extruded	natural	211 310 046	●
Snap-on 10	50	extruded	natural	211 310 047	●
Snap-on 12.5	50	extruded	natural	211 310 048	●

*with galvanized steel C-profile
Tolerances according to DIN2768 or DIN16942, tolerance class g. Tolerances and dimensions of steel C-profiles, see pp 135-136.
Intermediate sizes available at short notice and charged at full meter prices.
Extruded profiles made from Original Material "S"® black are not antistatic.

● ex stock
○ at short notice on request

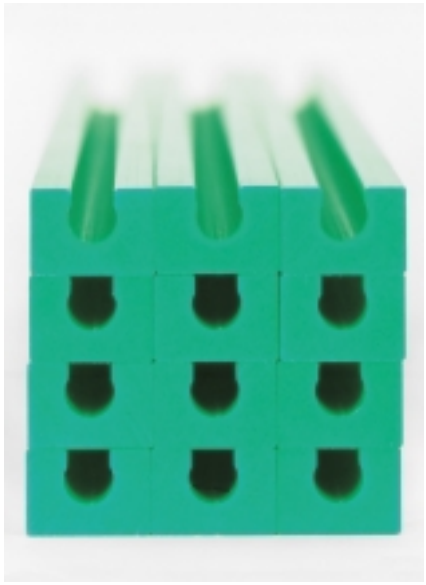

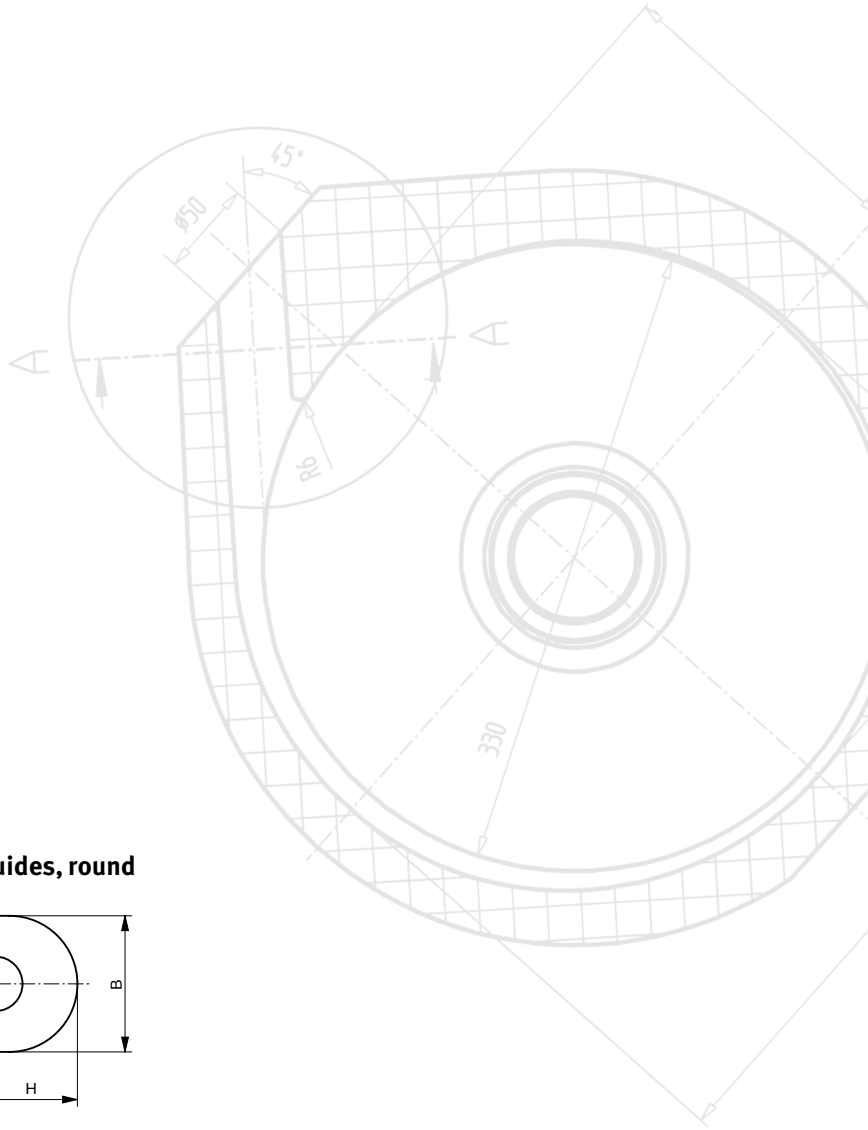

Clip-on Guides, square

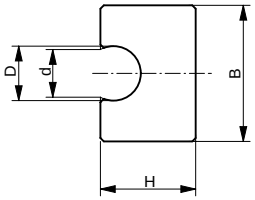

Clip-on Guides, round

Clip-on guides for round bar	Dimensions H/B/d mm	Type	Standard length m	Original Material "S"®	Part no.	Availability
square for round bar D = 8mm	14/20/7.0	extruded	2	green black antistatic	211 410 001 211 410 004	● ●
square for round bar D = 10mm	16/22/8.5	extruded	2	green black antistatic	211 410 002 211 410 005	● ●
square for round bar D = 12mm	18/24/10	extruded	2	green black antistatic	211 410 003 211 410 006	● ●
round for round bar D = 8mm	14/20/7.0	extruded	2	green black antistatic	211 410 007 211 410 010	● ●
round for round bar D = 10mm	16/22/8.5	extruded	2	green black antistatic	211 410 008 211 410 011	● ●
round for round bar D = 12mm	18/24/10	extruded	2	green black antistatic	211 410 009 211 410 012	● ●

Tolerances according to DIN2768 or DIN16942, tolerance class g. Intermediate sizes available at short notice and charged at full meter prices.
Extruded profiles made from Original Material "S"® black are not antistatic.

● ex stock
○ at short notice on request

97.5
5
12
5
21
26
33
12
61.5
(1)
10
"D"
60°
90°
22.5
7
3
26
M5 15tief

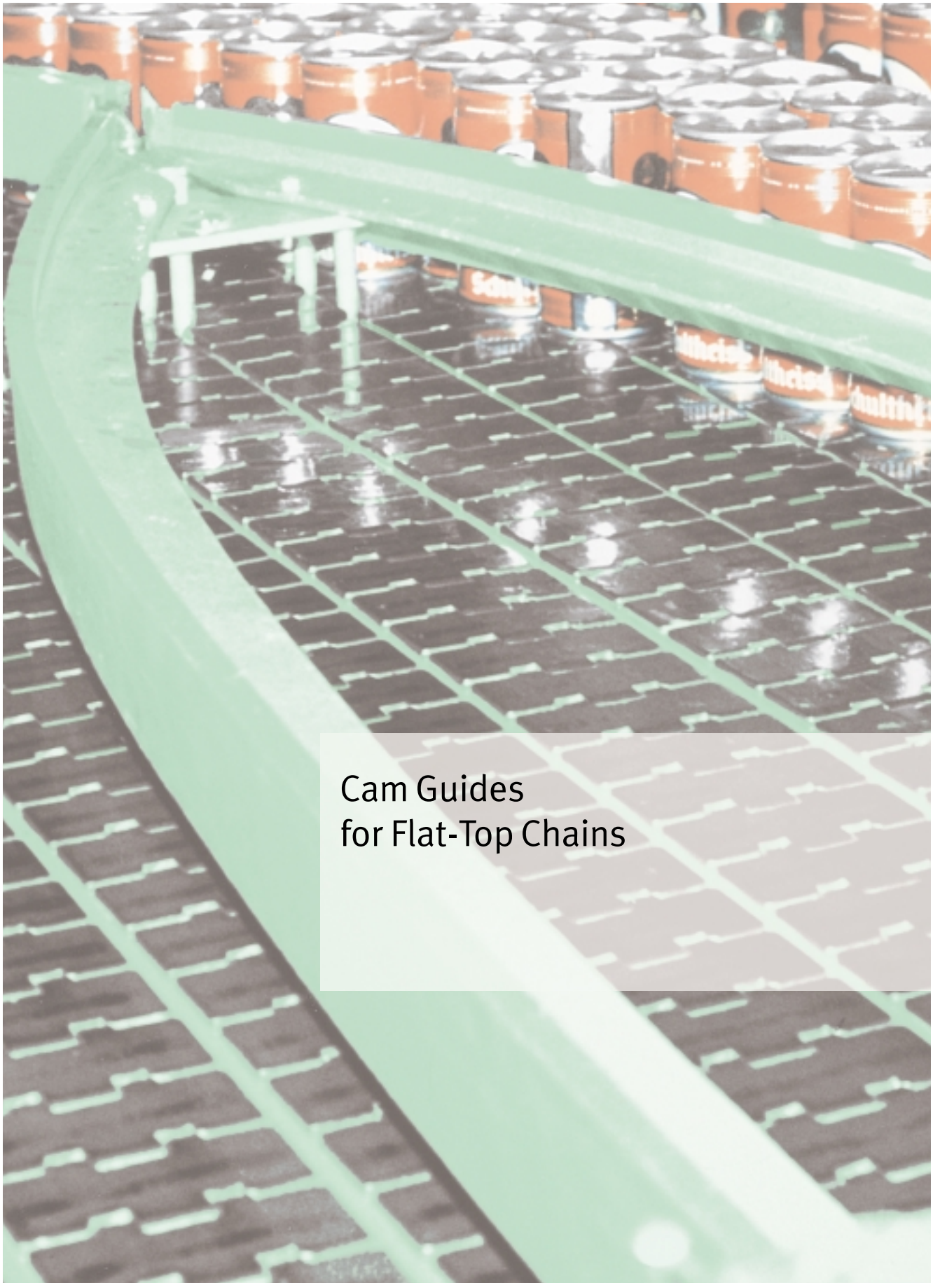

Cam Guides for Flat-Top Chains

Cam Guides for Flat-Top Chains

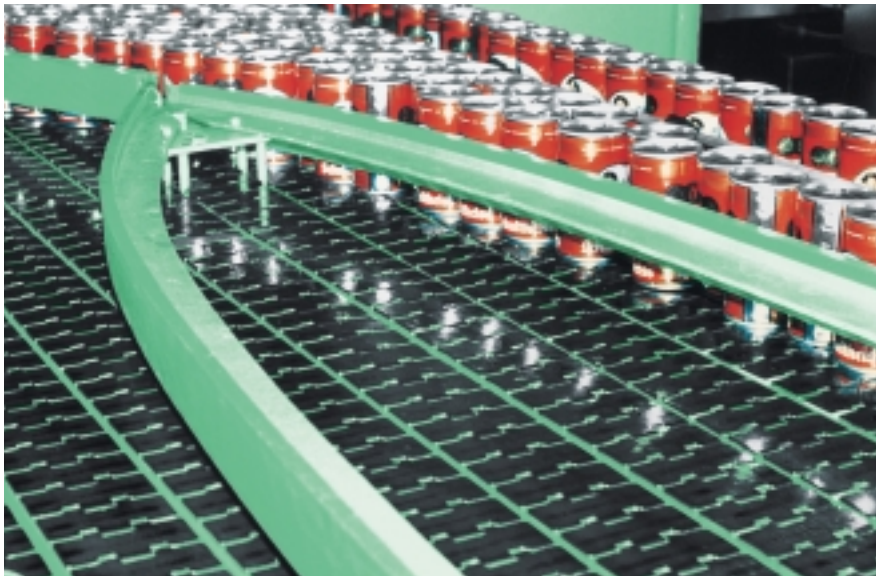

Due to their specific requirements, cam guides are made from Original Material "S"® 1000 black antistatic.

This material shows high wear resistance and excellent slide properties for dry running. It is also chemically resistant, does not absorb moisture and runs quietly.

Our cam guides for flat-top chains are available in two versions: a three-part dovetail design and a two-part TAB-profile.

Standard cam guides are available in bends of 90°, 60°, 45° and 30°. Should our standard range not meet your demands, we will be glad to produce custom guides to your own specification.

All cam guides are available with and without 100mm straight ends. Please indicate your preferred type by selecting the relevant part no.

On request, we can also produce and supply straight guides for the various chain sizes at short notice. Please contact us with your enquiry.

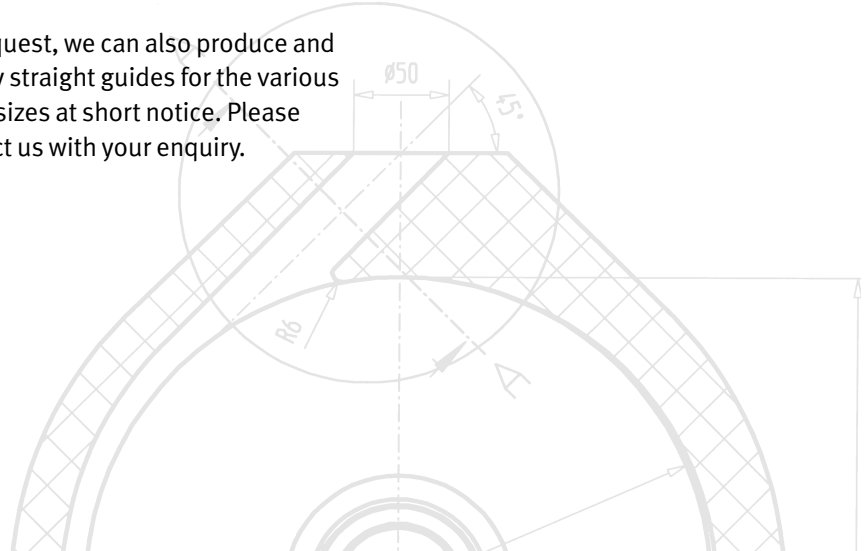

90° Standard Cam Guides

made from Original Material ”S”1000® black antistatic for flat-top chains, dovetail profile, with and without straight ends

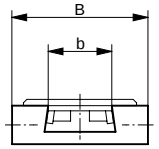

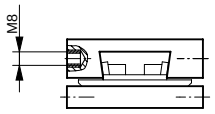

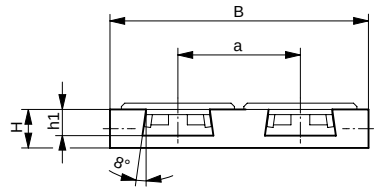

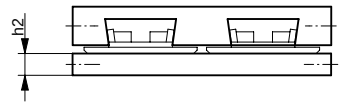

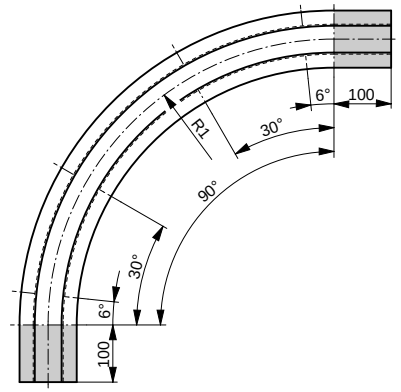

Selection Chart

Guide no. with straight ends	Guide no. without straight ends	For use with chain type	No. of guideways	B mm	a mm	R_1 mm	b_1 mm	H mm	h_1 mm	h_2 mm	Part no. with straight ends	Part no. without straight ends	Availability
S500/1GE	S500/1	SS 881-K325 SSC 881-K325 SSC 8811-K325 LF 880-K325 D 880-K325	1	100	90	500	41.3	25	17	16	321 020 051	321 020 001	○
S500/2GE	S500/2		2	190	90	500	41.3	25	17	16	321 020 052	321 020 002	○
S500/3GE	S500/3		3	280	90	500	41.3	25	17	16	321 020 053	321 020 003	○
S500/4GE	S500/4		4	370	90	500	41.3	25	17	16	321 020 054	321 020 004	○
S500/5GE	S500/5		5	460	90	500	41.3	25	17	16	321 020 055	321 020 005	○
S500/6GE	S500/6		6	550	90	500	41.3	25	17	16	321 020 056	321 020 006	○
S860/1GE	S860/1	SS 881-K325	1	100	90	860	41.3	25	17	16	321 020 057	321 020 007	○
S860/2GE	S860/2	SSC 881-K325	2	190	90	860	41.3	25	17	16	321 020 058	321 020 008	○
S860/3GE	S860/3	SSC 8811-K325	3	280	90	860	41.3	25	17	16	321 020 059	321 020 009	○
S860/4GE	S860/4	LF 880-K325	4	370	90	860	41.3	25	17	16	321 020 060	321 020 010	○
S860/5GE	S860/5	D 880-K325	5	460	90	860	41.3	25	17	16	321 020 061	321 020 011	○
S610/1GE	S610/1	SS 881-K450	1	125	120	610	41.3	25	17	16	321 020 062	321 020 012	○
S610/2GE	S610/2	SSC 881-K450	2	245	120	610	41.3	25	17	16	321 020 063	321 020 013	○
S610/3GE	S610/3	SSC 8811-K450	3	365	120	610	41,3	25	17	16	321 020 064	321 020 014	○
S610/4GE	S610/4	LF 880-K450 D 880-K450	4	485	120	610	41.3	25	17	16	321 020 065	321 020 015	○
S610/1GE	S610/1	SS 881-K750 SSC 8811-K750	1	200	195	610	41.3	25	17	16	321 020 066	321 020 016	○
S610/2GE	S610/2		2	395	195	610	41.3	25	17	16	321 020 067	321 020 017	○
S610/3GE	S610/3		3	590	195	610	41.3	25	17	16	321 020 068	321 020 018	○
S610/1GE	S610/1	LF 882-K450	1	125	120	610	58	27	21	16	321 020 069	321 020 019	○
S610/2GE	S610/2		2	245	120	610	58	27	21	16	321 020 070	321 020 020	○
S610/3GE	S610/3		3	365	120	610	58	27	21	16	321 020 071	321 020 021	○
S610/1GE	S610/1	LF 882-K750	1	200	195	610	58	27	21	16	321 020 072	321 020 022	○
S610/2GE	S610/2		2	395	195	610	58	27	21	16	321 020 073	321 020 023	○
S610/1GE	S610/1	LF 882-K1000	1	265	260	610	58	27	21	16	321 020 074	321 020 024	○
S610/1GE	S610/1	LF 882-K1200	1	320	310	610	58	27	21	16	321 020 075	321 020 025	○

Tolerances to DIN2768, tolerance class m. Special sizes and designs, other technical and high-performance materials on request.

● ex stock
○ at short notice on request

90° Standard Cam Guides

made from Original Material ”S”1000® black antistatic for flat-top chains,
TAB-profile, with and without straight ends

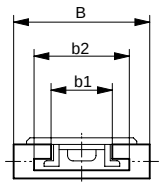

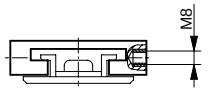

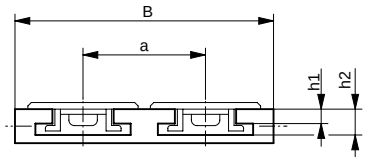

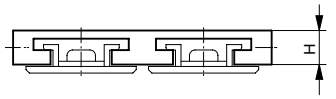

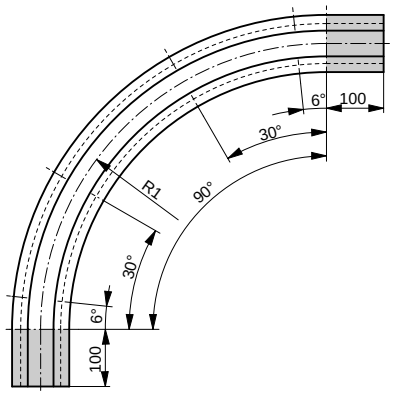

Selection Chart

Guide no. with straight ends	Guide no. without straight ends	For use with chain type	No. of guideways	B mm	a mm	R_1 mm	b_1 mm	b_2 mm	H mm	h_1 mm	h_2 mm	Part no. with straight ends	Part no. without straight ends	Availability
T500/1GE	T500/1	SS 881 TAB-K325 SSC 881 TAB-K325 SSC 8811 TAB-K325 LF 880 TAB-K325	1	100	90	500	45	70	25	10.6	19	321 020 076	321 020 026	○
T500/2GE	T500/2		2	190	90	500	45	70	25	10.6	19	321 020 077	321 020 027	○
T500/3GE	T500/3		3	280	90	500	45	70	25	10.6	19	321 020 078	321 020 028	○
T500/4GE	T500/4		4	370	90	500	45	70	25	10.6	19	321 020 079	321 020 029	○
T500/5GE	T500/5		5	460	90	500	45	70	25	10.6	19	321 020 080	321 020 030	○
T500/6GE	T500/6		6	550	90	500	45	70	25	10.6	19	321 020 081	321 020 031	○
T860/1GE	T860/1	SS 881 TAB-K325 SSC 881 TAB-K325 SSC 8811 TAB-K325 LF 880 TAB-K325	1	100	90	860	45	70	25	10.6	19	321 020 082	321 020 032	○
T860/2GE	T860/2		2	190	90	860	45	70	25	10.6	19	321 020 083	321 020 033	○
T860/3GE	T860/3		3	280	90	860	45	70	25	10.6	19	321 020 084	321 020 034	○
T860/4GE	T860/4		4	370	90	860	45	70	25	10.6	19	321 020 085	321 020 035	○
T860/5GE	T860/5		5	460	90	860	45	70	25	10.6	19	321 020 086	321 020 036	○
T610/1GE	T610/1	SS 881 TAB-K450	1	125	120	610	45	70	25	10.6	19	321 020 087	321 020 037	○
T610/2GE	T610/2	SSC 881 TAB-K450	2	245	120	610	45	70	25	10.6	19	321 020 088	321 020 038	○
T610/3GE	T610/3	SSC 8811 TAB-K450	3	365	120	610	45	70	25	10.6	19	321 020 089	321 020 039	○
T610/4GE	T610/4	LF 880 TAB-K450	4	485	120	610	45	70	25	10.6	19	321 020 090	321 020 040	○
T610/1GE	T610/1	SS 881 TAB-K750 SSC 881 TAB-K750 SSC 8811 TAB-K750	1	200	195	610	45	70	25	10.6	19	321 020 091	321 020 041	○
T610/2GE	T610/2		2	395	195	610	45	70	25	10.6	19	321 020 092	321 020 042	○
T610/3GE	T610/3		3	590	195	610	45	70	25	10.6	19	321 020 093	321 020 043	○
T610/1GE	T610/1	LF 882 TAB-K450	1	125	120	610	58	90	32	16	26	321 020 094	321 020 044	○
T610/2GE	T610/2		2	245	120	610	58	90	32	16	26	321 020 095	321 020 045	○
T610/3GE	T610/3		3	365	120	610	58	90	32	16	26	321 020 096	321 020 046	○
T610/1GE	T610/1	LF 882 TAB-K750	1	200	195	610	58	90	32	16	26	321 020 097	321 020 047	○
T610/2GE	T610/2		2	395	195	610	58	90	32	16	26	321 020 098	321 020 048	○
T610/1GE	T610/1	LF 882 TAB-K1000	1	265	260	610	58	90	32	16	26	321 020 099	321 020 049	○
T610/1GE	T610/1	LF 882 TAB-K1200	1	320	310	610	58	90	32	16	26	321 020 100	321 020 050	○

Tolerances to DIN2768, tolerance class m. Special sizes and designs, other technical and high-performance materials on request.

● ex stock
○ at short notice on request

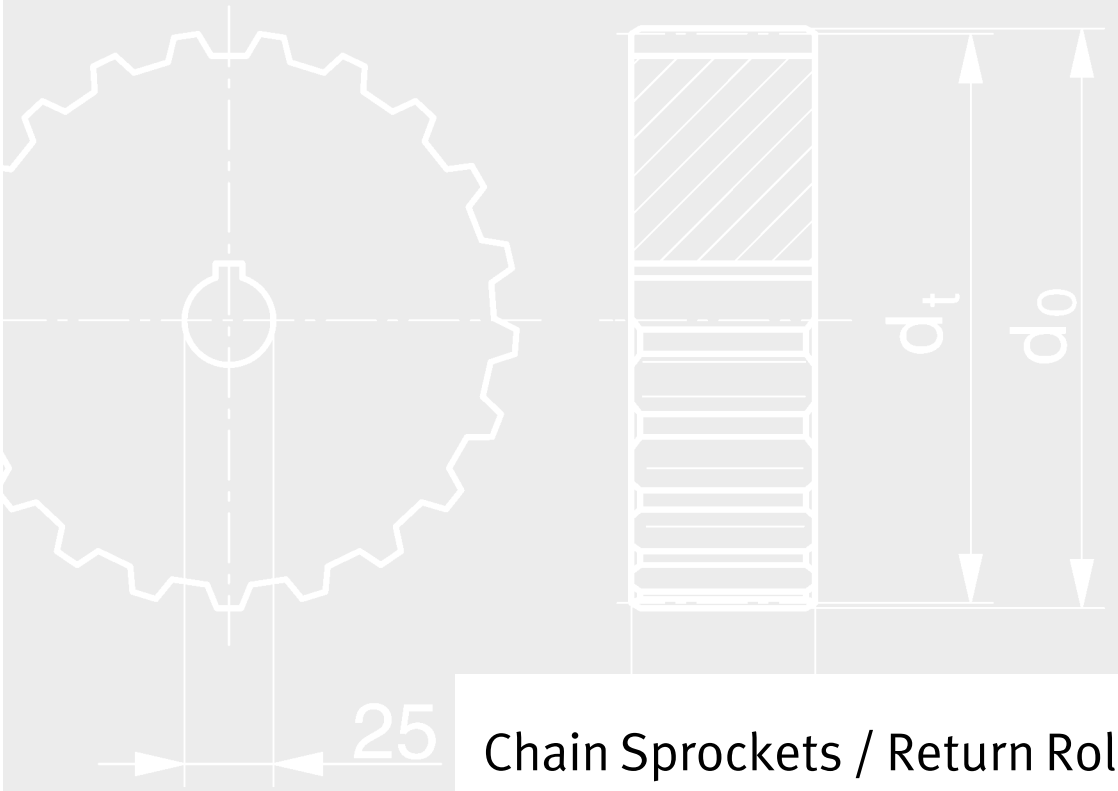

Chain Sprockets / Return Rollers for Flat-Top Chains

Ø36 +0.1
Ø42H11

45
R69
R35
A

Chain Sprockets (Murylon® natural)

milled
for chains 812-SSG 812-815

Our chain sprockets are milled from solid Murylon® natural and show high abrasion resistance and toughness, together with good wear resistance. The connecting bolts and nuts of the two-part version are made of V2A. Compared to injection moulded sprockets, they achieve a very long life.

One-part chain sprockets

No. of teeth	d_o mm	d_t mm	Part no.	Availability
17	105.5	104.0	322 010 024	○
19	117.3	117.0	322 010 025	○
21	129.3	129.0	322 010 026	○
23	142.0	141.2	322 010 027	○
25	154.0	153.2	322 010 028	○

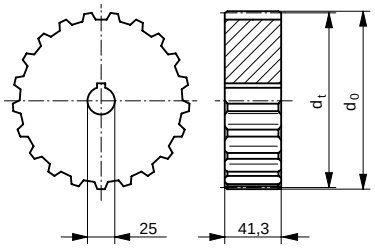

Feather slot to DIN6885

● ex stock
○ at short notice on request

Two-part chain sprockets

No. of teeth	d_o mm	d_t mm	Part no.	Availability
17	105.5	104.0	322010019	○
19	117.3	117.0	322010020	○
21	129.3	129.0	322010021	○
23	142.0	141.2	322010022	○
25	154.0	153.2	322010023	○

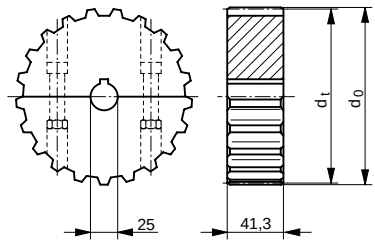

Feather slot to DIN6885
Tolerances according to DIN2768, tolerance class g.
Other chain sprocket types and holes available on request.

● ex stock
○ at short notice on request

Return Rollers (Original Material ”S”1000® black antistatic)
turned
for chains 812-SSG 812-815-820-820G-831

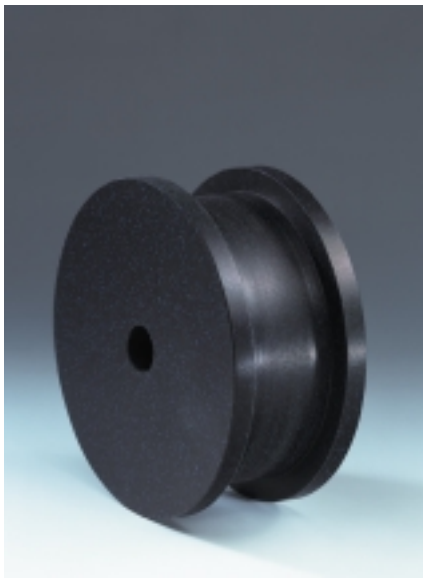

Our return rollers are turned from solid Original Material ”S”1000® black antistatic , resulting in very long life compared to injection moulded sprockets. They show high abrasion resistance and toughness together with good wear resistance.

One-part return rollers

For no. of teeth	d_k mm	d_f mm	Part no.	Availability
19	117.0	96.0	322010043	○
21	129.0	108.0	322010044	○
23	141.0	120.0	322010045	○
25	153.0	132.0	322010046	○

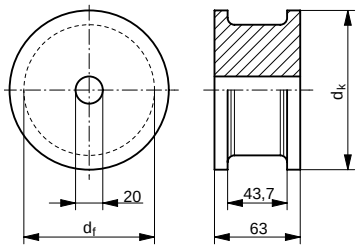

Tolerances according to DIN2768, tolerance class g.
Other return roller types and holes available on request.

- ● ex stock
- ○ at short notice on request

Guide Rail Accessories

445
ø20
R15
ø15
ø90
30
30
50
50

Guide Rail Accessories

Rail support made from Murylon®A black + GF

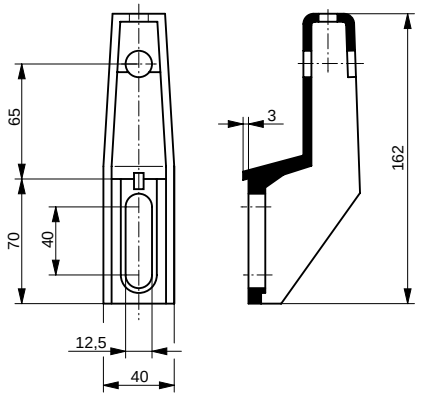

Part no.	Availability
323 010 024	●

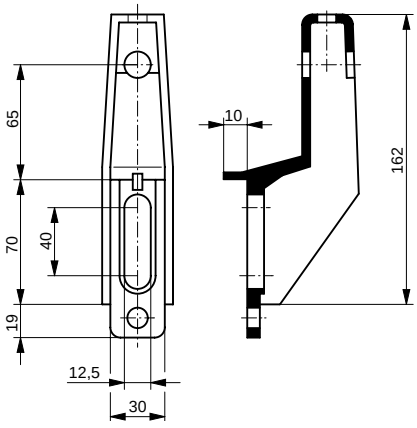

Part no.	Availability
323 010 025	●

● ex stock
○ at short notice on request

We offer a wide variety of accessories. Whatever you need – rail supports, clamp-on or fixing parts – , please contact us. We will be glad to advise you.

Clamp-on Parts

made from Murylon® black + GF and Stainless Steel (V2A)

Set 1

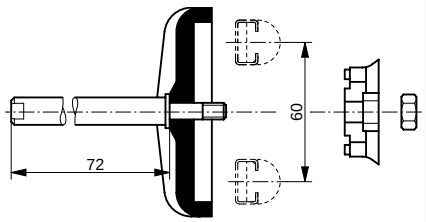

Set 2

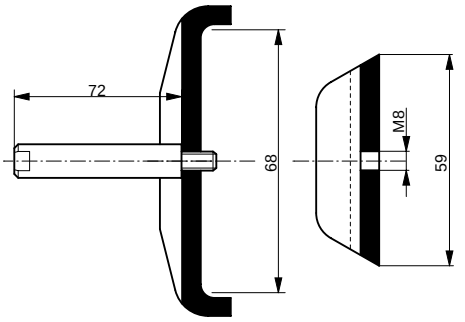

Set 3

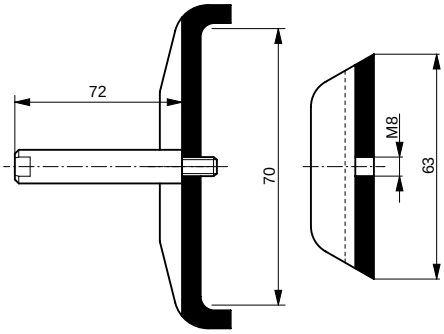

Clamp-on set	Part no.	Availability
Set 1 for guide profile HR 2020 or CF3	323 010 026	●
Set 2 for guide bar 12 mm dia	323 010 027	●
Set 3 for guide bar 10 mm dia	323 010 027	●

● ex stock
○ at short notice on request

Fixing Sets

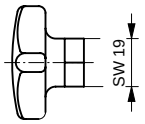

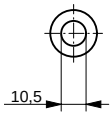

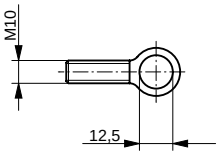

Set 1 cross handle, PA6 + MS | disc, V2A | eyebolt, galvanized steel

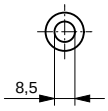

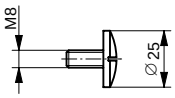

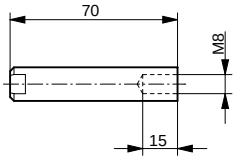

Set 2 disc, V2A | bolt, MS 58 | pin, V2A

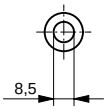

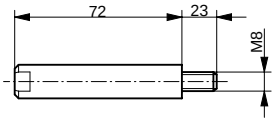

Set 3 disc, V2A | pin, V2A

Fixing set	Part no.	Availability
Set 1	323 010 029	●
Set 2	323 010 030	●
Set 3	323 010 031	●

● ex stock
○ at short notice on request

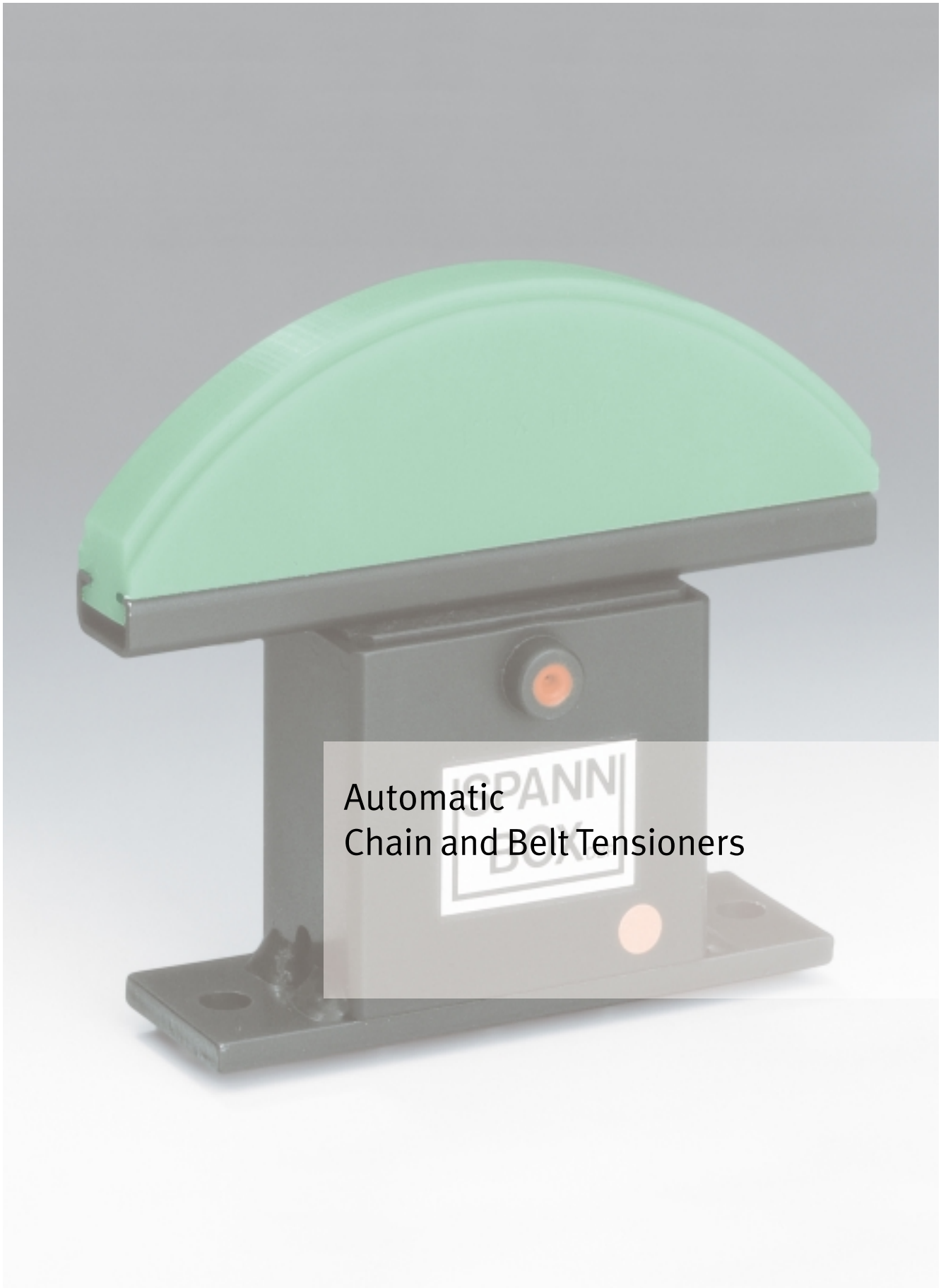

Automatic
Chain and Belt Tensioners

A
Ø50
15°
R6
A
330

Ø36 +0.1
Ø42 H11

Automatic Chain and Belt Tensioners

SPANN-BOX® and SPANN-BOY®

Smooth production runs
In the past, cyclists were frequently tempted to counteract slack chains by vigorous pre-tensioning.

Result – sluggishness, often accompanied by clicking noises, caused by too much stress on the chain links.

Today's generation of cyclists knows nothing of their parents' tensioning problems. Their bikes already come with effective built-in tensioners.

Chain/belt tensioners in materials handling installations share the same basic aim – to increase chain or belt life and thus, in turn, help components to continue to run smoothly.

A Murtfeldt tensioning device can keep the non-driving free length's combined force of chain weight plus centrifugal force under control, one of our basic aims having been to find a way of matching the spring force to individual chain sizes and installation conditions.

Similarly for belt tensioners: Different drive and conveyor belts need different rates of pre-tensioning.

Advantages
These are the advantages Murtfeldt automatic chain and belt tensioners can offer you:

- quiet running of chain
- reduced wear around chain links and drive wheels
- lower operating noise levels
- automatic readjustment
- compensation of chain/belt stretch
- suitable as chain/belt controllers
- suitable for chain/belt drive returns
- small size
- easy to instal

In stock
Our standard range includes a multitude of different tensioning systems, enabling us to meet virtually any ad-hoc demand ex stock. Tell us about your problem – we deliver immediately.

Should your problem need individual attention, our consultants are sure to develop a successful custom solution for you – free of charge and without obligation, of course.

The History of the SPANN-BOX®

How it all started...

There was this young man (let's call him Joe), who represented a large German company manufacturing roller chains, conveyor chains and chain sprockets. He would often have to deal with technical problems arising wherever conveyor chains had to pass over support rails: Lubricants would cause contamination which, in turn, was only too easily passed on to the goods being handled. Without lubrication, however, high wear on chains and rails was a virtual certainty.

In 1966, his search for materials which were wear resistant, self-lubricating (no oil lubrication), sturdy, noise absorbing and easy to machine, led him to Murtfeldt.

A friend working in the paper converting industry offered to test a plastic material called Material "S"® for its potential in conveyor chain applications. So Joe bought some from Murtfeldt, had it made into slide rails to his own specification and fitted these into one of his friend's machines. The result, after approx. 3,000 working hours, was extraordinary: Even though there had been no lubrication, neither chains nor rails showed any wear.

In Murtfeldt, Joe found a business partner willing to put his good idea into practice and giving him a stake in future business transactions. It did not take Joe long to prepare slide rail designs and attractive advertising material for potential clients. To start with, there were of course quite a few sceptics who could not imagine that plastics might be suitable for such applications but the innovative venture was soon successful.

Today this application is universally accepted. Just look around any trade fair for, say, packaging materials, materials handling etc, and you see not only those slide rails but also many other machine parts which, in the old days, would have required lubrication. And because the material was so easy to machine, there were almost no limits to the slide profiles that could be designed. Since then, many new applications in mechanical engineering have been opened up.

Bending guide rails was simple, so their curved parts were sometimes used to tension chains. Whilst this offered certain advantages compared to using conventional idler sprockets, the effect was lost as soon as chains started to stretch due to wear. Joe realized that what was needed was a practical method of tensioning chains more effectively.

In 1972, he was called in by DEMAG Handling Technology. Four driven bogie assemblies of a gantry crane were to be run synchronously by chain drive. When the question of chain tensioning came up, there seemed no answer at first – there was absolutely no space at all to fit the usual adjustable idler sprockets. Building on his earlier ideas, however, before long Joe was able to

come up with a practical solution. It consisted of a rectangular casing containing two pistons with several compression springs inside them, transmitting, via curved slide rails, a spring force to the chain on both sides simultaneously. Certainly no one else had ever thought of tensioning chains this way before.

It was the first step towards developing the patented automatic chain tensioner SPANN-BOX®. Its characteristics are these: A rectangular steel casing with a piston inside containing three compression springs. Each of these is individually mechanically pre-tensioned, and each can be individually released by turning a screw. Whenever a spring is released, it adds to the spring force which can also be reduced again just as easily. This method allows a single device to fit a broad range of different chain sizes. SPANN-BOX® Size 1 offers spring travel of 40mm and approx. 400N spring force, Size 2 60mm and 800N.

Even with spring travel fully taken up, 50% of the spring force still remains. Releasing a spring initially kept in reserve permits the spring force to be kept constant quite easily. It is absolutely unnecessary to release all three springs immediately on installation.

Eventually, Joe developed SPANN-BOX® Type 30, an attractive low-cost alternative to Size 1. Although housed in a plastic casing, this tensioner has a very high load rating. However, it is available only with an arc segment slide profile. SPANN-BOX® Size 0 has the same design but only one spring and was developed for so-called small chain drives.

New applications led to new questions. How for example do you tension a chain if there is just barely 30mm of space behind it? The solution was the invention of the SPANN-BOY®.

Then there is SPANN-BOY®TS (two springs), a development new to the market: Two springs, one light-duty and the other heavy-duty, can both be controlled individually, allowing you to select either one of them without having to decide beforehand which of the two spring forces to order. Plus, releasing both together gives you even more tensioning power.

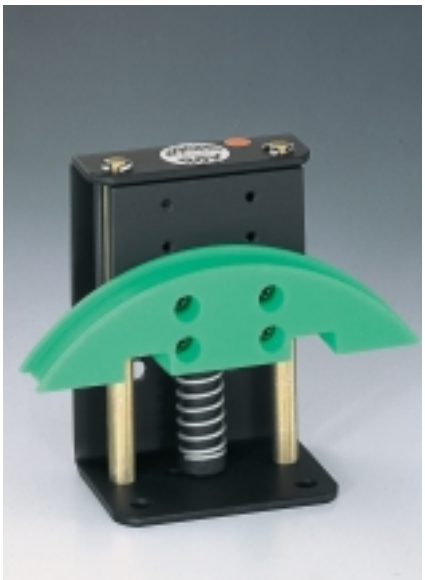

Selecting the Right Chain Tensioner

We recommend that, if possible, you tension your chain using a tensioning system with a slide profile which results in quieter running of the chain, reduced noise levels and less wear on chain links.

Where space is extremely restricted, chain sprockets with small diameters tend to be used. Their low number of teeth leads to uneven and noisy running of the chain and associated vibrations accelerating chain link wear.

The best way to tension a chain is to use slide profiles. The radius of the most popular SPANN-BOX® arc segment profile corresponds to a chain sprocket diameter of 180mm. That means it is approximately three times larger than that of a standard idler sprocket.

To select the chain tensioner best able to meet your demands, please first define your parameters:

- chain sprocket configuration; centre distances (please supply sketch)
- chain type
- single direction of travel or reversible?
- chain speed (if speed exceeds 1m/s, we can recommend suitable alternatives)
- is chain lubricated or dry-running?
- continuous or intermittent operation?
- do you anticipate any contamination (scale, wood or metal chips) liable to accelerate wear on plastics?
- will the tensioner be exposed to temperatures above 60 °C?
- any chemical influences?

We will be pleased to support you in selecting the right chain tensioner.

Please ask us to fax you our 'Chain and Belt Tensioners' information sheet.

Selection Chart

Slide Profiles for Chain Tensioners and Their Advantages

Arc segment profile
This is the best slide profile form and generally supports several rollers at a time, thus ensuring that the chain runs evenly and smoothly.

Semicircular profile
Recommended only for 90° returns and where installation space is tight, this profile tends to be in contact with just a few chain rollers at a time which may lead to running noise and chain vibrations.

Return profile
Suitable for returns up to 180°, this profile controls excessive chain stretch if properly installed.

Block profile
Both the dead weight of large roller chains as well as the forces of gravity acting on the tensioner depending on the mode of operation place high demands on its construction. Therefore the slide profile and spring core of this design are made in one piece (no bolt connection) to ensure the high stability required. To support the maximum number of large pitch chain rollers, the slide profile has been extended to 300mm.

Chain sprocket/roller
For small returns or very high chain speeds (frictional heat), both SPANN-BOY® and SPANN-BOX® are also available with chain sprockets or rollers.

Selection Chart

Size			Simplex Chain							Duplex Chain							Triplex Chain				
Chain	Pitch																				
DIN ISO	mm	in.	MINI-TENSIONER	SPANN-BOY®	SPANN-BOY TS®	SPANN-BOX® Size 0	SPANN-BOX® Size 30	SPANN-BOX® Size 1	SPANN-BOX® Size 2	MINI-TENSIONER	SPANN-BOY®	SPANN-BOY TS®	SPANN-BOY® Size 0	SPANN-BOX® Size 30	SPANN-BOX® Size 1	SPANN-BOX® Size 2	SPANN-BOY®	SPANN-BOY® TS	SPANN-BOX® Size 30	SPANN-BOX® Size 1	SPANN-BOX® Size 2
Chains not listed up to 15mm width [2]																					
06B	9.525	3/8																			
08B	12.7	1/2																			
10B	15.875	5/8																			
12B	19.05	3/4																			
16B	25.4	1																			
20B	31.75	1 1/4																			
24B	38.1	1 1/2																			[1]
28B	44.45	1 3/4																			[1]
32B	50.8	2																			[1]
40B	63.5	2 1/2																			[1]
48B	76.2	3																			[1]

1) For duplex and triplex chains, several® tensioners may be installed side by side.
2) Slide profile/return roller equipped with U-profile.

Special designs on request
This selection chart is intended to help you choose the type of slide profile and SPANN-BOX® size required. For example: Chain size 10B (5/8"), simplex chain with narrow installation ratio => SPANN-BOX® Size 1 with semicircular profile or chain sprocket. Please see information on reverse for spring forces required or contact our application engineers.

How Our Tensioning System Works

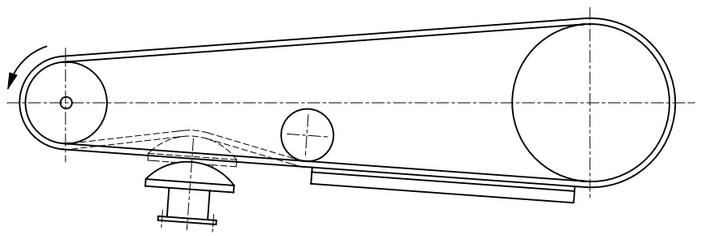

Optional ‘light’ or ‘heavy-duty’ spring force
All Murtfeldt tensioning systems are available in two versions, with either ‘light’ or ‘heavy-duty’ spring force. You can also choose between one, two or three springs depending on the type selected, thus widening the choice yet further to three different spring force values. Whichever spring force you choose, it is generated by individual compression springs inside a metal or plastic casing exerting pressure on a mobile profile in wear-resistant Original Material ”S”®, which in turn transmits that pressure to the chain or belt running over it. Our tensioners MINI-TENSIONER, SPANN-BOY® and SPANN-BOX® Size 0 are available with one and two tensioning springs, the other SPANN-BOX® systems with three, totalling spring forces of 13 to 786N for instance.

Colour code indicates amount of spring travel taken up
Colour markings on the tensioner show optimum spring pressure or change in spring force, if applicable.

Easy installation
For ease of installation, all Murtfeldt chain and belt tensioners have locking screws holding down their spring force. Once the tensioner has been fitted in its final position, its spring force can be released exactly as required. In tensioners with three springs, for example, each locking screw releases one spring, thus permitting highly variable spring force control.

Selecting the spring force
These options allow you to establish the most appropriate tension – during the test run at the latest. A spring initially kept in reserve may well be useful for adjusting the spring force later. And the choice of ‘light’ or ‘heavy-duty’ spring force for every size of tensioner offers you a total of six different spring force options.
Another advantage: As long as the installation remains unchanged, the spring force is still not exhausted even after the relatively long spring travel of 40mm or 60mm has been taken up.

Proven quality
The steel casings of our chain and belt tensioners are solidly constructed to be highly stress resistant.

Zinc phosphate dipcoating ensures excellent corrosion protection while the surface is synthetically enamelled at 180ºC to make it shock and scratch proof all-round.

An economical, robust and corrosion-resistant alternative are SPANN-BOX® Sizes 0 and 30 with fibre glass reinforced plastic casings. Of course their slide profiles are made from Original Material ”S”®, as are those of all SPANN-BOX® types.

The tensioning system itself is zinc galvanized. For applications requiring even higher corrosion resstance, a stainless steel range is also available.

Operation in critical temperature ranges
Given the right choice of suitable materials from our range, tensioning systems can be used even in critical temperature ranges, as follows:

Standard steel springs: -10/+170 °C
Stainless steel springs: -40/+200 °C
For operating temperatures above 60° C we recommend you get in touch with us so that we can suggest the best material for you.

Our tensioning systems
SPANN-BOY® and SPANN-BOX® operate on a spring-loaded/free-running basis and, under load, are not intended to act as a rigid return which might result in excessive surface pressure and associated slide profile wear.

If SPANN-BOX®/SPANN-BOY® tensioners are fitted underneath the chain, the weight of the chain on the tensioner has to be added to the total spring force required.

With relatively large centre distances, a supporting slide rail helps to ensure that the weight of the chain does not reduce the spring force of the tensioner too much. An additional support roller or skid serves to keep in place the nondriving free chain length requiring tensioning (which should be as short as possible). Best results are achieved with a chain tensioner just behind the drive sprocket.

Tension data and spring travel

Type	MINI-TENSIONER		SPANN-BOY®		SPANN-BOY® TS		
Spring travel, mm	16	16	40	40	40	40	40
Spring type	light	heavy-duty	light	heavy-duty	light	heavy-duty	extra heavy-duty
Spring force	N	N	N	N	N	N	N
1 spring released	19 – 13	85 – 58	58 – 32	132 – 60	65 – 33	125 – 63	–
2 springs released	–	–	–	–	–	–	190 – 96
3 springs released	–	–	–	–	–	–	–

Type	SPANN-BOX® Size 0		SPANN-BOX® Sizes 30 & 1		SPANN-BOX® Size 2	
Spring travel, mm	40	40	40	40	60	60
Spring type	light	heavy-duty	light	heavy-duty	light	heavy-duty
Spring force	N	N	N	N	N	N
1 spring released	58 – 32	132 – 60	58 – 32	132 – 60	148 – 82	262 – 118
2 springs released	–	–	116 – 64	164 – 120	296 – 164	524 – 236
3 springs released	–	–	174 – 96	396 – 180	444 – 246	786 – 354

The weight of the lower end of the chain requiring tensioning should not exceed the force of a spring already 50% released. The second and third spring may be released later as required.

Even though our extensive standard range covers most applications, for best results a number of factors should be taken into account prior to selecting a particular chain tensioner. That is why we offer our clients a free consultation with our application engineers.

Visual Indicator

Our SPANN-BOX® Sizes 0, 30, 1 and 2 chain and belt tensioners are equipped with colour coded markings as standard, allowing maintenance engineers to check at a glance how much spring travel has been taken up at the SPANN-BOX®.

The green marking shows that chain tension is within the correct operating range. If there is insufficient spring force to ensure optimum quiet running, the colour code signals red and the tensioner should be readjusted. Only after all possible readjustment options have been exhausted, need the chain be shortened or replaced.

- Tensioners with return profile for chains up to 08B-3 have visual indicators
- For production reasons, tensioners with block profile have no visual indicators

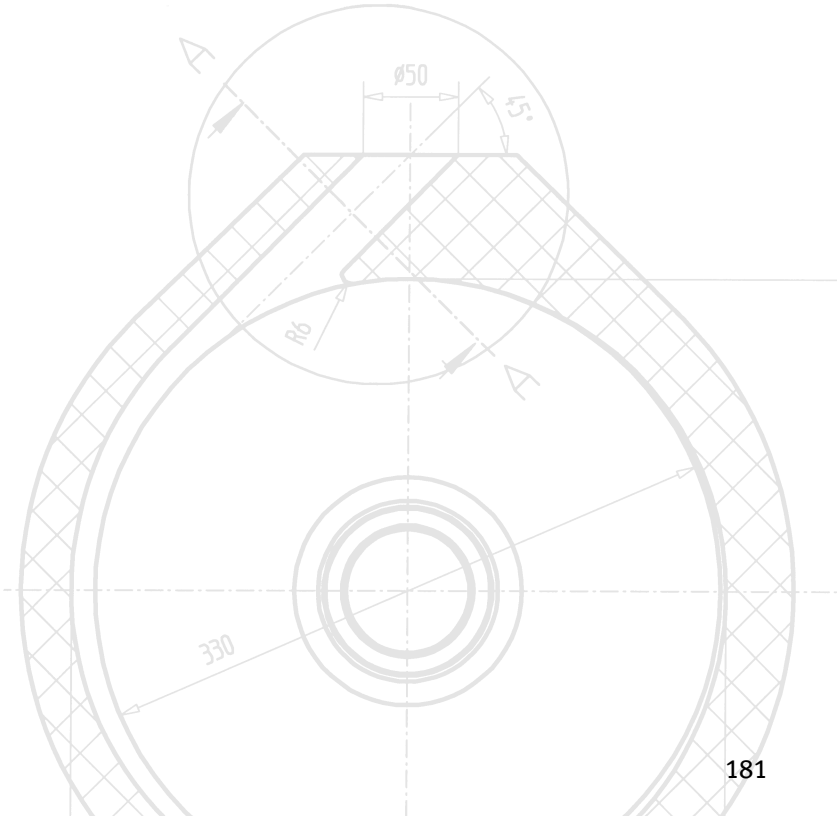

Installation Systems

NEW!

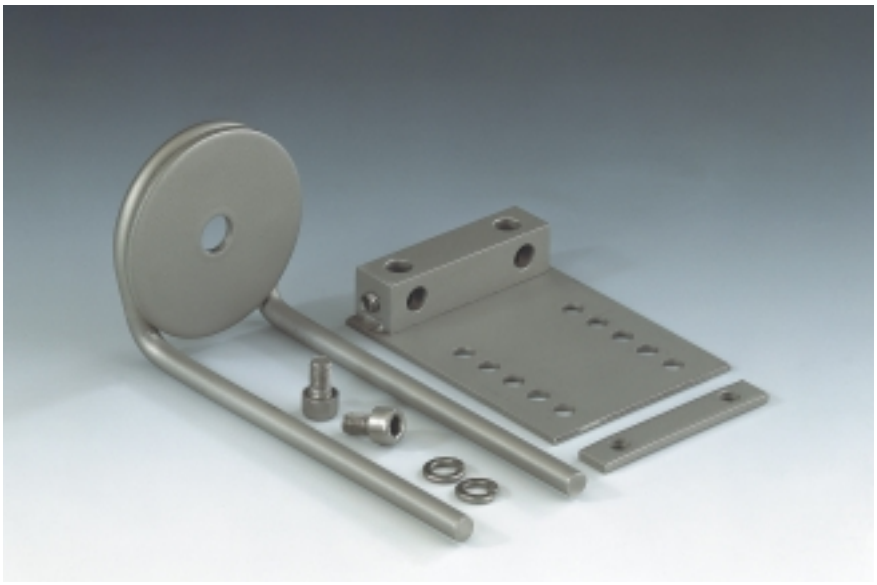

These ancillary installation systems allow low-cost, easy and flexible fitting as well as quick and easy readjustment of both SPANN-BOX® and SPANN-BOY®TS systems, thus avoiding costly downtimes at your plant.

SPANN-BOX® Sizes 0/30/1
SPANN-BOY® TS
Until recently, two bolts were needed to fit these installation systems. Now, our new SMART MATE® offers low-cost, easy and flexible single-bolt fitting.

These are its decisive advantages:

- One central bolt fits complete system to installation or machine frame
- Infinitely variable adjustment of SPANN-BOX® and SPANN-BOY®TS by max. 180mm towards chain/belt centre in both horizontal and vertical positions
- Complete system can be swivelled by 360° for optimum positioning
- All installation systems can be fitted horizontally as well as vertically
- Swivelling the system by 180° allows both height and lateral adjustments of max. 60mm
- SPANN-BOX® Size 1 can be fitted diagonally
- Surplus length of brackets may be shortened if necessary
- All SMART MATE® parts are made from stainless steel and thus corrosion resistant
- Your chosen installation system is available as a complete set for SPANN-BOX® Sizes 0, 30 and 1 as well as for SPANN-BOY®TS
- Set contains all Allen Keys needed for adjustment

Example: SPANN-BOX® Size 1

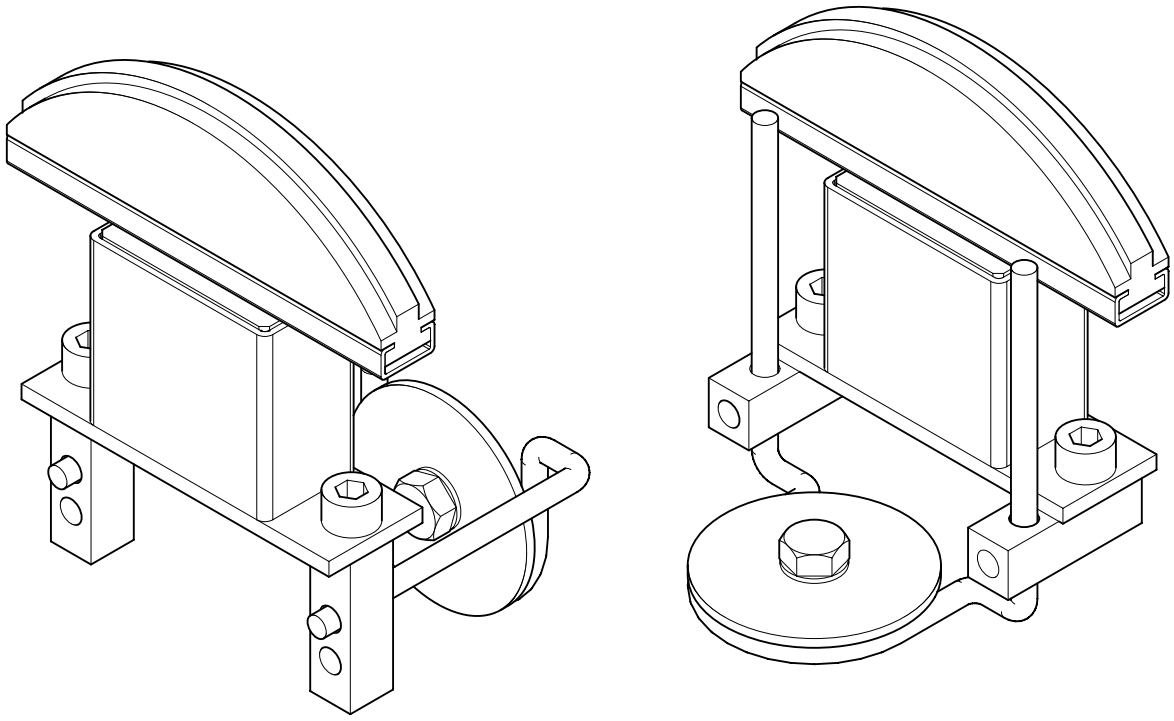

For further information on dimensions and order details, please see pp 229–236.

Fixing Bracket

SPANN-BOX® Sizes 1 and 2
Robust steel design with lacquered surface or in stainless steel.
Maximum possible adjustment for
Size 1/67mm
Size 2/75mm

Ø36 ±0.1
Ø42H11

Chain Tensioners for Roller Chains to DIN8187

ø36 +0.1
ø42H11

Chain Tensioners with Arc Segment Profile

for roller chains to DIN8187

The advantageous design of arc segment profiles made from Original Material "S"® green leads to smooth running of your chains, reduced noise levels and less wear on your chain links. In other words: longer chain life.

MINI-TENSIONER with Arc Segment Profile

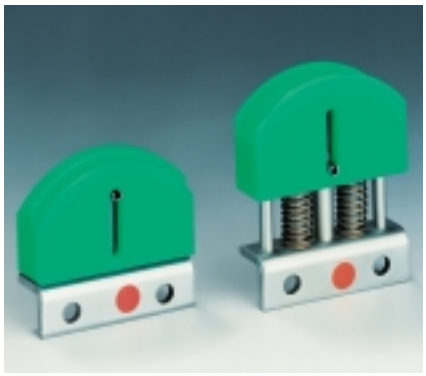

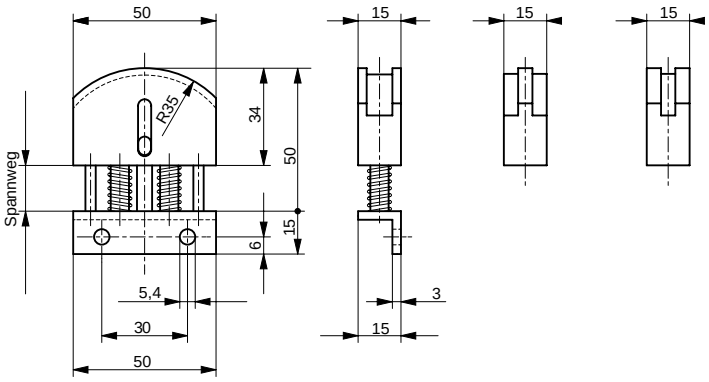

Standard design
The MINI-TENSIONER is the smallest automatic chain tensioner in our range, designed for smaller chains up to ⅜" pitch.

Spring force
Two compression springs (pre-set spring force either light or heavy-duty at your option) provide the spring force required.

Spring force values

spring force	light N	heavy-duty N	spring travel mm
2 springs	19 – 13	85 – 58	16

Chain guide
Chains with an overall width of up to 10mm slide with their link plates in a U-profile. Roller chain 06B-1 and duplex roller chains run on guide profiles.

Centre distance
For best results despite relatively short spring travel, we recommend a maximum centre distance of 200mm.

installation option

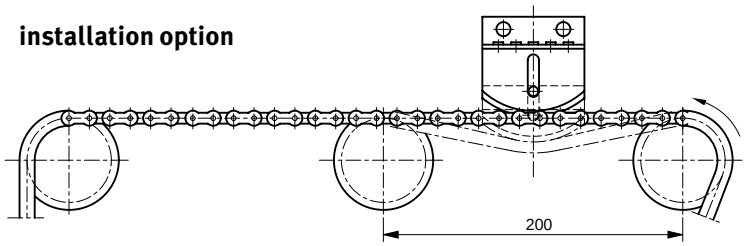

Fixing method
by bolts on the angle bracket at the base

MINI-TENSIONER with arc segment profile

Chain size DIN8187	Spring force light Part no.	Spring force heavy-duty Part no.	Availability
<06B-1 (U-profile)	281 050 001	281 050 002	●
06B-1	281 050 003	281 050 004	●
08B-1	281 050 009	281 050 010	●
05B-2	281 050 005	281 050 006	○
06B-2	281 050 007	281 050 008	○

Special and stainless steel designs on request

● ex stock
○ at short notice on request

SPANN-BOY® with Arc Segment Profile

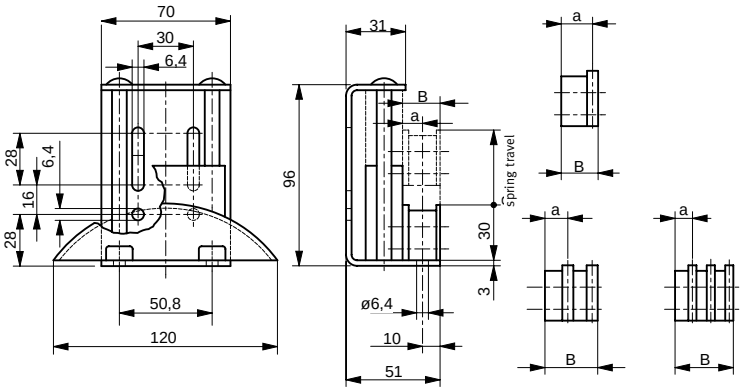

Standard design
This is a robust tensioner with a steel casing for conditions where space is too restricted to allow a tensioning system to be fitted below the chain. SPANN-BOY® is fitted beside the chain. The slide profile needs just 30mm space below the chain.

Chain guide
Chains with an overall width of up to 15mm slide with their link plates in a U-profile. This applies to chain sizes of 6mm, 8mm, ⅜" up to 1½" x ⅜". Larger roller chains run on guide profiles.

Spring force
One compression spring (pre-set spring force either light or heavy-duty at your option) provides the spring force required.

Spring force values

spring force	light N	heavy-duty N	spring travel mm
1 spring	58 – 32	132 – 60	40

SPANN-BOY® with arc segment profile

Chain size DIN8187	B mm	a mm	Spring force light Part no.	Spring force light Part no.	Stainless steel spring force heavy-duty Part no.	Availability
< 06B-1 (U-profile)	20	10	281 040 001	281 040 002	282 040 002	●
08B-1	20	16.5	281 040 003	281 040 004	282 040 004	●
10B-1	20	15.7	281 040 005	281 040 006	282 040 006	●
12B-1	20	14.8	281 040 007	281 040 008	282 040 008	●
06B-2	20	7.5	281 040 009	281 040 010	282 040 010	○
08B-2	32	15.3	281 040 010	281 040 012	282 040 012	●
10B-2	32	11.3	281 040 013	281 040 014	282 040 014	●
05B-3	20	7.4	281 040 015	281 040 016	282 040 016	○
06B-3	32	9	281 040 017	281 040 018	282 040 018	○

Special designs on request

● ex stock
○ at short notice on request

Fixing method

Configuration and size of the fixing holes in the casing allow easy installation and adjustments up to 40mm once spring travel has been fully taken up.

SPANN-BOY® TS

with Arc Segment Profile

NEW!

Three spring force options due to compression springs which can be individually released!

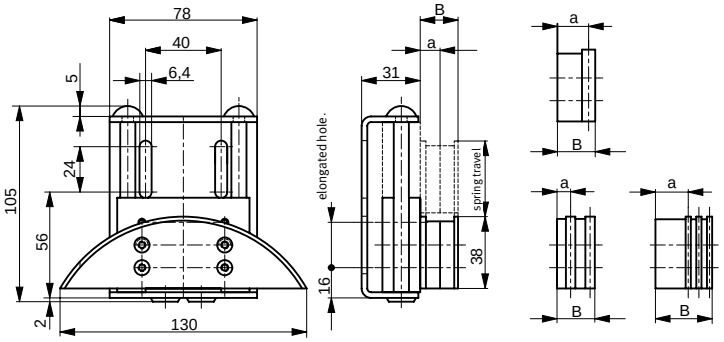

Standard design

This is a robust tensioner with a steel casing for conditions where space is too restricted to allow a tensioning system to be fitted below the chain. SPANN-BOY® TS is fitted beside the chain. The slide profile needs just 30mm space below the chain.

Chain guide

Chains with an overall width of up to 15mm slide with their link plates in a U-profile. This applies to chain sizes of 6mm, 8mm, ⅜" up to 1½"x ³⁄₁₆". Larger roller chains run on guide profiles.

Spring force

Two pre-tensioned compression springs which can be individually released, offering you a choice of three spring forces: light, heavy-duty or extra heavy-duty.

Spring force values

spring force	light N	heavy-duty N	extra heavy-duty N	spring travel mm
1 spring	65 – 33	125 – 63	–	40
2 springs	–	–	190 – 96	40

SPANN-BOY® TS with arc segment profile

Chain size DIN8187	B mm	a mm	spring force light/ heavy-duty/ extra heavy-duty Part no.	Stainless steel spring force heavy-duty/ extra heavy-duty Part no.	Avail-ability
<06B-1(U-profile)	20	10.5	281 060 001	282 060 002	●
08B-1	20	16.5	281 060 003	282 060 004	●
10B-1	20	15.7	281 060 005	282 060 006	●
12B-1	20	14.8	281 060 007	282 060 008	●
06B-2	20	7.5	281 060 009	282 060 010	○
08B-2	32	15.3	281 060 011	282 060 012	●
10B-2	32	11.3	281 060 013	282 060 014	●
05B-3	20	8.5	281 060 015	282 060 016	○
06B-3	32	9.4	281 060 017	282 060 018	○

Special designs on request

● ex stock
○ at short notice on request

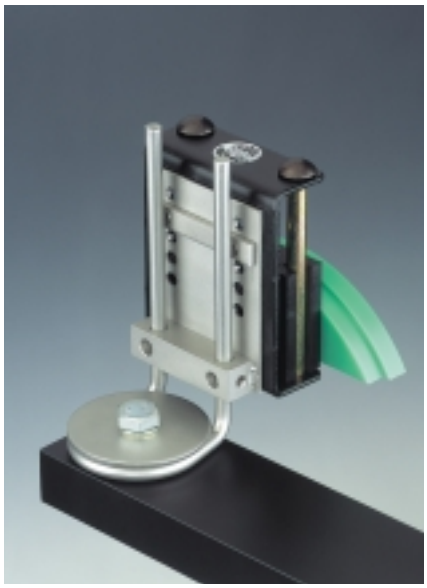

Fixing method

Configuration and size of the fixing holes in the casing allow easy installation and adjustments up to 40mm once spring travel has been fully taken up.

SMART MATE®, our ancillary fixing set, allows easy and flexible installation of SPANN-BOY® TS (see pp 229–236).

SPANN-BOX®with Arc Segment Profile

Size 30

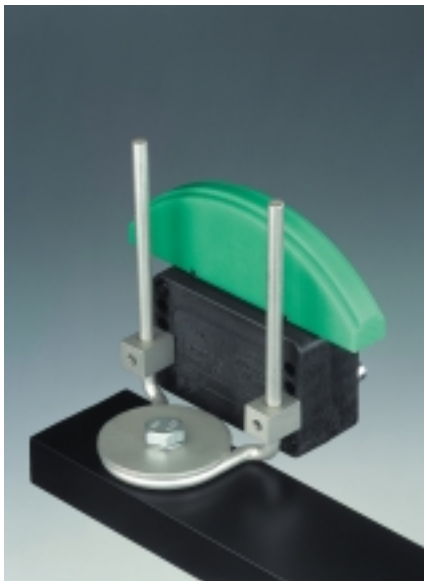

Fixing method
Configuration and size of the fixing holes in the casing allow easy installation and adjustments of the whole SPANN-BOX® up to 30mm once spring travel has been fully taken up.

Standard design
SPANN-BOX® Size 30 is an economically-priced tensioner in a plastic casing and specially suitable for conditions where no major mechanical stresses are present but where corrosion protection is required.

Spring force
Three pre-tensioned compression springs (pre-set spring force either light or heavy-duty at your option) can be individually released, generating the spring force required.

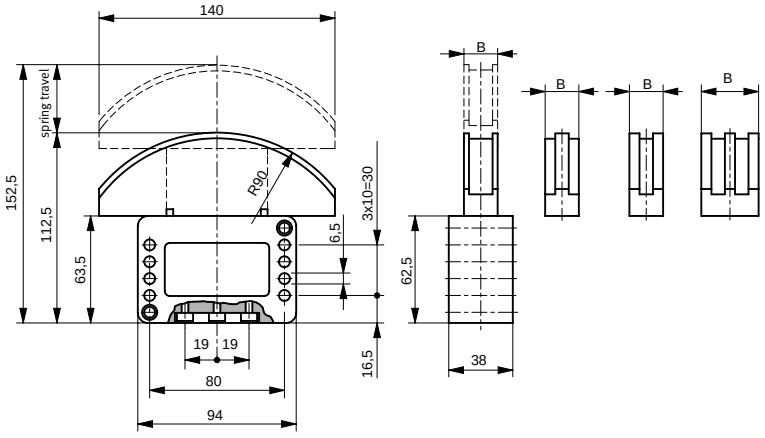

Spring force values

spring force N	light N	heavy-duty N	spring travel mm
1 spring	58 – 32	132 – 60	40
2 springs	116 – 64	264 – 120	
3 springs	174 – 96	396 – 180	

Chain guide
Chains with an overall width of up to 15mm slide with their link plates in a U-profile. This applies to chain sizes of 6mm, 8mm, ³⁄₈" up to ¹⁄₂"x³⁄₁₆". Larger roller chains run on guide profiles.

SPANN-BOX® Size 30 with arc segment profile

Chain size DIN8187	B mm	Spring force light Part no.	Spring force heavy-duty Part no.	Spring force heavy-duty stainless steel springs Part no.	Availability
<06B-1 (U-profile)	20	281 030 001	281 030 002	282 030 002	●
08B-1	20	281 030 003	281 030 004	282 030 004	●
10B-1	20	281 030 005	281 030 006	282 030 006	●
12B-1	20	281 030 007	281 030 008	282 030 008	●
16B-1	20	281 030 009	281 030 010	282 030 010	●
05B-2	20	281 030 011	281 030 012	282 030 012	●
06B-2	20	281 030 013	281 030 014	282 030 014	●
08B-2	20	281 030 015	281 030 016	282 030 016	●
10B-2	25	281 030 017	281 030 018	282 030 018	●
12B-2	30	281 030 019	281 030 020	282 030 020	●
05B-3	20	281 030 021	281 030 022	282 030 022	○
06B-3	25	281 030 023	281 030 024	282 030 024	●
08B-3	30	281 030 025	281 030 026	282 030 026	●
10B-3	40	281 030 027	281 030 028	282 030 028	○
12B-3	45	281 030 029	281 030 030	282 030 030	○

Special designs on request

● ex stock
○ at short notice on request

SPANN-BOX® with Arc Segment Profile

Sizes 1 and 2

Standard design
SPANN-BOX® Sizes 1 and 2 are robust tensioners with steel casings.

Chain guide
Chains with an overall width of up to 15mm slide with their link plates in a U-profile. This applies to chain sizes of 6mm, 8mm, ⅜" bis zu ½" x 3/16". Larger roller chains run on guide profiles.

Size 1

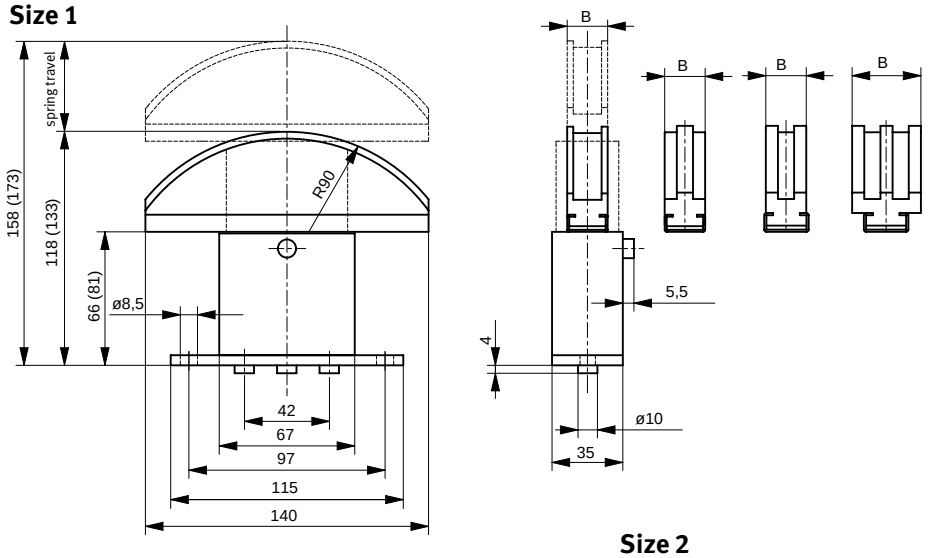

(Dimensions) for long casing

Size 2

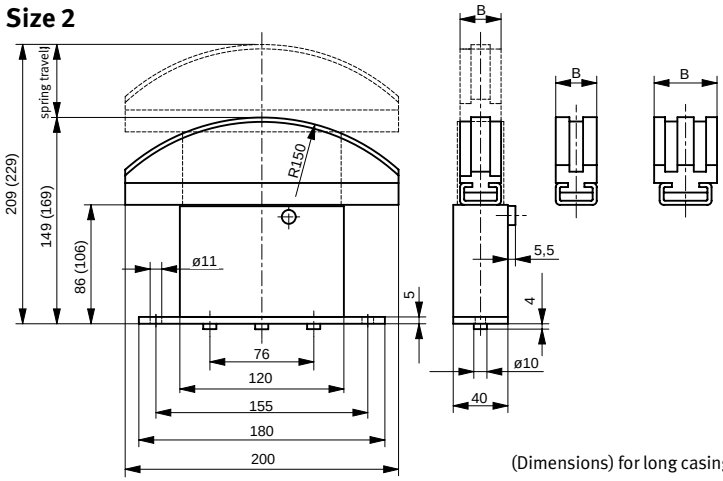

(Dimensions) for long casing

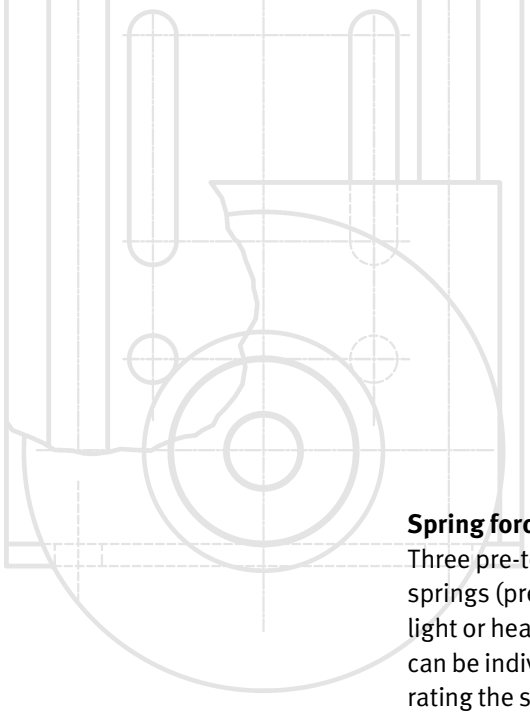

Spring force
Three pre-tensioned compression springs (pre-set spring force either light or heavy-duty at your option) can be individually released, generating the spring force required.

Reversible operation
For tensioning reversible chain drives we recommend SPANN-BOX® Sizes 1 and 2 with long casings. This design is only available with heavy-duty spring force.

Spring force values for Size 1

spring force	light N	heavy-duty N	spring travel mm
1 spring	58 – 32	132 – 60	40
2 springs	116 – 64	264 – 120	
3 springs	174 – 96	396 – 180	

Spring force values for Size 2

spring force	light N	heavy-duty N	spring travel mm
1 spring	148 – 82	262 – 118	60
2 springs	296 – 164	524 – 236	
3 springs	444 – 246	786 – 354	

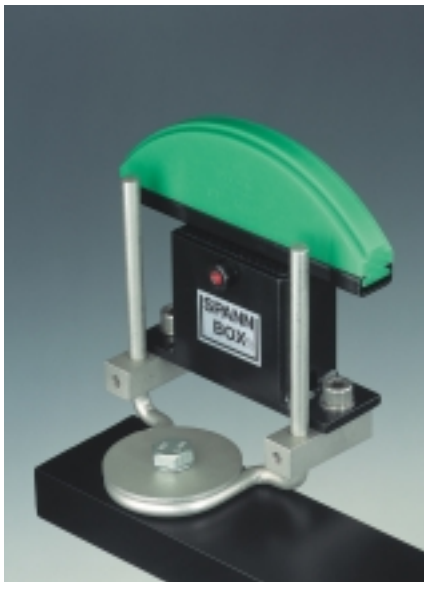

Fixing method
Fixing brackets from our standard range allow easy installation. Adjustments of the whole SPANN-BOX® up to 67mm for Size 1 and up to 75mm for Size 2 are possible once spring travel has been fully taken up.

SMART MATE®, our ancillary fixing set, allows easy and flexible installation of SPANN-BOX® Size 1 (see pp 229-236).

SPANN-BOX® Size 1 with arc segment profile

Chain size DIN8187	B mm	Short casing spring force light Part no.	Short casing spring force heavy-duty Part no.	Long casing spring force heavy-duty Part no.	Stainless steel spring force heavy-duty short casing Part no.	Stainless steel spring force heavy-duty long casing Part no.	Availability
<06B-1(U-profile)	20	281 010 001	281 010 002	281 010 202	282 010 002	282 010 202	●
08B-1	20	281 010 003	281 010 004	281 010 204	282 010 004	282 010 204	●
10B-1	20	281 010 005	281 010 006	281 010 206	282 010 006	282 010 206	●
12B-1	20	281 010 007	281 010 008	281 010 208	282 010 008	282 010 208	●
16B-1	20	281 010 009	281 010 010	281 010 210	282 010 010	282 010 210	●
20B-1	20	281 010 011	281 010 012	281 010 212	282 010 012	282 010 212	●
06B-2	20	281 010 013	281 010 014	281 010 214	282 010 014	282 010 214	●
08B-2	20	281 010 015	281 010 016	281 010 216	282 010 016	282 010 216	●
10B-2	25	281 010 017	281 010 018	281 010 218	282 010 018	282 010 218	●
12B-2	30	281 010 019	281 010 020	281 010 220	282 010 020	282 010 220	●
16B-2	45	281 010 021	281 010 022	281 010 222	282 010 022	282 010 222	○
06B-3	25	281 010 023	281 010 024	281 010 224	282 010 024	282 010 224	●
08B-3	30	281 010 025	281 010 026	281 010 226	282 010 026	282 010 226	●
10B-3	40	281 010 027	281 010 028	281 010 228	282 010 028	282 010 228	○
012B-3	45	281 010 029	281 010 030	281 010 230	282 010 030	282 010 230	○

SPANN-BOX® Size 2 with arc segment profile

Chain size DIN8187	B mm	Short casing spring force light Part no.	Short casing spring force heavy-duty Part no.	Long casing spring force heavy-duty Part no.	Stainless steel spring force heavy-duty short casing Part no.	Stainless steel spring force heavy-duty long casing Part no.	Availability
12B-1	25	281 020 001	281 020 002	281 020 202	282 020 002	282 020 202	●
16B-1	25	281 020 003	281 020 004	281 020 204	282 020 004	282 020 204	●
20B-1	25	281 020 005	281 020 006	281 020 206	282 020 0026	282 020 206	●
24B-1	30	281 020 007	281 020 008	281 020 208	282 020 008	282 020 208	○
08B-2	25	281 020 009	281 020 010	281 020 210	282 020 010	282 020 210	●
10B-2	25	281 020 011	281 020 012	281 020 212	282 020 012	282 020 212	●
12B-2	30	281 020 013	281 020 014	281 020 214	282 020 014	282 020 214	●
16B-2	45	281 020 015	281 020 016	281 020 216	282 020 016	282 020 216	●
20B-2	55	281 020 017	281 020 018	281 020 218	282 020 018	282 020 218	○
24B-2	70	281 020 019	281 020 020	281 020 220	282 020 020	282 020 220	○
08B-3	30	281 020 021	281 020 022	281 020 222	282 020 022	282 020 222	●
10B-3	40	281 020 023	281 020 0024	281 020 224	282 020 024	282 020 224	●
12B-3	45	281 020 025	281 020 026	281 020 226	282 020 026	282 020 226	●
16B-3	75	281 020 027	281 020 028	281 020 228	282 020 028	282 020 228	○
20B-3	90	281 020 029	281 020 030	281 020 230	282 020 030	282 020 230	○

Special designs on request

● ex stock
○ at short notice on request

Chain Tensioners with Semicircular Profile

for roller chains to DIN8187

Chain tensioners with a semicircular profile can be used where those with arc segment or return profiles cannot. This applies particularly to conditions where installation space is tight.

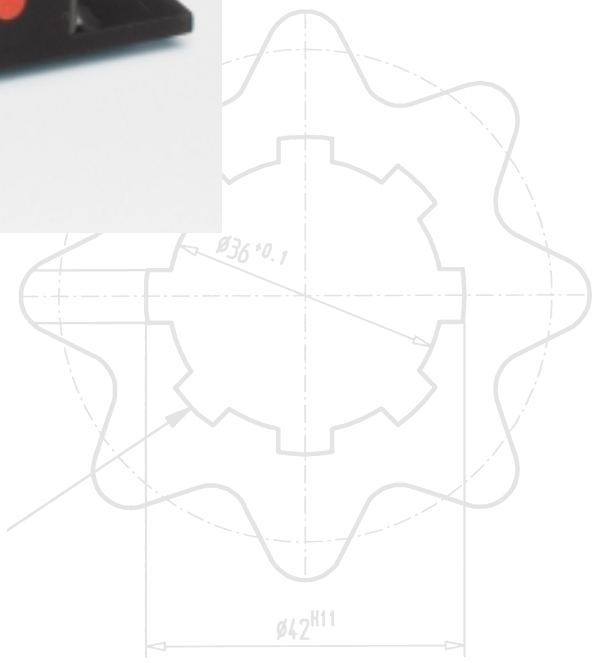

SPANN-BOX® with Semicircular Profile

Size 0

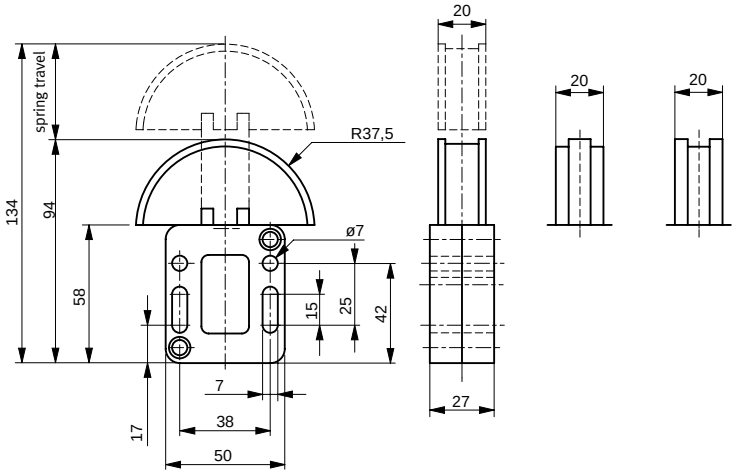

Standard design

This small, economical tensioner with a corrosion-proof plastic casing is particularly suitable for small chains up to ³⁄₄" pitch where installation space is restricted.

Chain guide

Chains with an overall width of up to 15mm slide with their link plates in a U-profile. This applies to chain sizes of 6mm, 8mm, ³⁄₈" up to ¹⁄₂" x ³⁄₁₆". Larger roller chains run on guide profiles.

Spring force

A lockable compression spring (pre-set spring force either light or heavy-duty at your option) generates the spring force required. The steel lok-king pin is located in the base of the casing.

Spring force values

spring force	light N	heavy-duty N	spring travel mm
1 spring	58 – 32	132 – 60	40

Chain size DIN8187	Spring force light Part no.	Spring force heavy-duty Part no.	Spring force heavy-duty stainless steel springs Part no.	Avail-ability
<06B-1 (U-profile)	281 000 001	281 000 002	282 000 202	●
08B-1	281 000 003	281 000 004	282 000 204	●
10B-1	281 000 003	281 000 004	282 000 205	●
12B-1	281 000 005	281 000 006	282 000 206	●
06B-2	281 000 007	281 000 008	282 000 208	●
08B-2	281 000 009	281 000 010	282 000 210	●
10B-2	281 000 011	281 000 012	282 000 212	●

Special designs on request

● ex stock
○ at short notice on request

Fixing method

Configuration and size of the fixing holes in the casing allow easy installation and adjustment of the whole SPANN-BOX® up to 23mm once initial spring travel of 40mm has been fully taken up.

SMART MATE®, our ancillary fixing set, allows easy and flexible SPANN-BOX® installation (see pp 229–236).

SPANN-BOX® with Semicircular Profile

Sizes 1 and 2

Standard design
Robust tensioners with steel casings.

Chain guide
All roller chains run on guide profiles.

Spring force
Three pre-tensioned compression springs (spring force either light or heavy-duty at your option) can be individually released to generate the spring force required.

Reversible operation
For tensioning reversible chain drives we recommend the relevant SPANN-BOX® sizes with long casings. These designs are only available with heavy-duty spring force.

Size 1

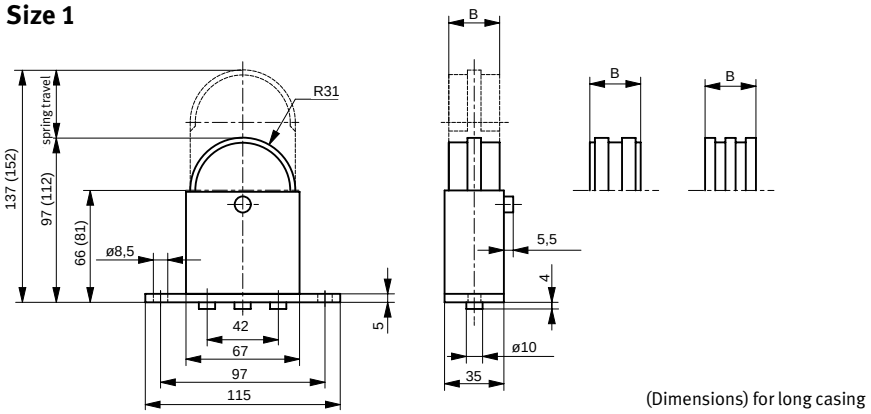

(Dimensions) for long casing

Size 2

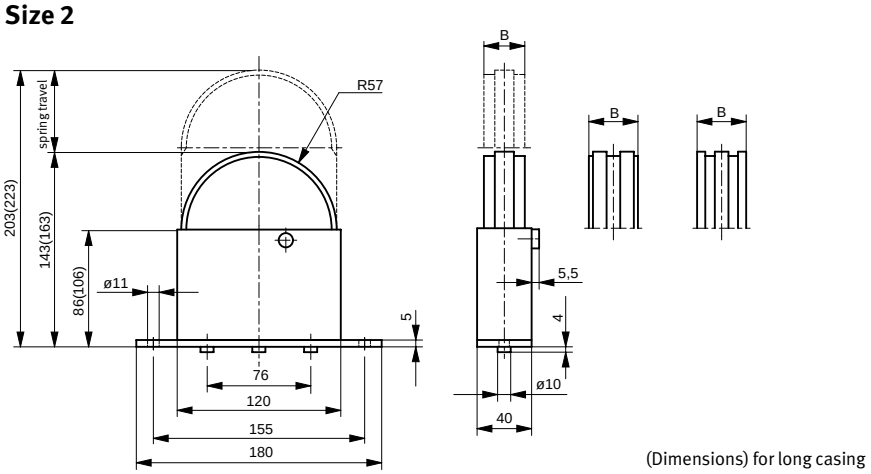

(Dimensions) for long casing

Spring force values for Size 1

spring force	light N	heavy-duty N	spring travel mm
1 spring	58-32	132-60	40
2 springs	116-64	164-120	
3 springs	174-96	396-180	

Spring force values for Size 2

spring force	light N	heavy-duty N	spring travel mm
1 spring	148-82	262-118	60
2 springs	296-164	524-236	
3 springs	444-246	786-354	

SPANN-BOX® Size 1 with semicircular profile

Chain size DIN8187	B mm	Short casing spring force light Part no.	Short casing spring force heavy-duty Part no.	Long casing spring force heavy-duty Part no.	Stainless steel short casing spring force heavy-duty Part no.	Stainless steel long casing spring force heavy-duty Part no.	Avail-ability
06B-1	20	281 010 031	281 010 032	281 010 232	282 010 032	282 010 232	●
08B-1	20	281 010 033	281 010 034	281 010 234	282 010 034	282 010 234	●
10B-1	20	281 010 035	281 010 036	281 010 236	282 010 036	282 010 236	●
12B-1	20	281 010 037	281 010 038	281 010 238	282 010 038	282 010 238	●
06B-2	20	281 010 039	281 010 040	281 010 240	282 010 040	282 010 240	●
08B-2	20	281 010 041	281 010 042	281 010 242	282 010 042	282 010 242	●
10B-2	20	281 010 043	281 010 044	281 010 244	282 010 044	282 010 244	●
12B-2	20	281 010 045	281 010 046	281 010 246	282 010 046	282 010 246	●
06B-3	25	281 010 047	281 010 048	281 010 248	282 010 048	282 010 248	●
08B-3	30	281 010 049	281 010 050	281 010 250	282 010 050	282 010 250	●

SPANN-BOX® Size 2 with semicircular profile

Chain size DIN8187	B mm	Short casing spring force light Part no.	Long casing spring force heavy-duty Part no.	Short casing spring force heavy-duty Part no.	Stainless steel short casing spring force heavy-duty Part no.	Stainless steel long casing spring force heavy-duty Part no.	Avail-ability
12B-1	33	281 020 031	281 020 032	281 020 232	282 020 032	282 020 232	●
16B-1	33	281 020 033	281 020 034	281 020 234	282 020 034	282 020 234	●
08B-2	33	281 020 035	281 020 036	281 020 236	282 020 036	282 020 236	●
10B-2	33	281 020 037	281 020 038	281 020 238	282 020 038	282 020 238	●
12B-2	33	281 020 039	281 020 040	281 020 240	282 020 040	282 020 240	●
08B-3	33	281 020 041	281 020 042	281 020 242	282 020 042	282 020 242	●
10B-3	40	281 020 042	281 020 044	281 020 244	282 020 044	282 020 244	○

Special designs on request

● ex stock
○ at short notice on request

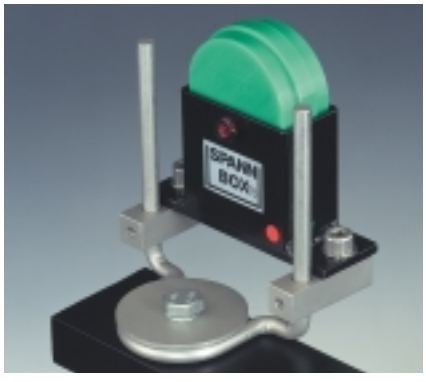

Fixing method

Fixing brackets from our standard range allow easy installation and SPANN-BOX® adjustments up to 67mm / 75mm respectively once spring travel has been fully taken up.

SMART MATE®, our ancillary fixing set, allows easy and flexible SPANN-BOX® installation (see pp 229–236).

Chain Tensioners with 180° Return Profile

for Roller Chains to DIN8187

These chain tensioners are suitable for 180° chain returns. The radius of the standard size corresponds to a chain sprocket diameter of 140 or 200mm but can be increased on request. Fitted behind the drive, they allow chain stretch twice the length of spring travel to be kept under control.

SPANN-BOX® with 180° Return Profile

Sizes 1 and 2

Standard design
Robust tensioners with steel casings.

Chain guide
All roller chains run on guide profiles.

Spring force
Three pre-tensioned compression springs can be individually released to generate the spring force required.

Size 1

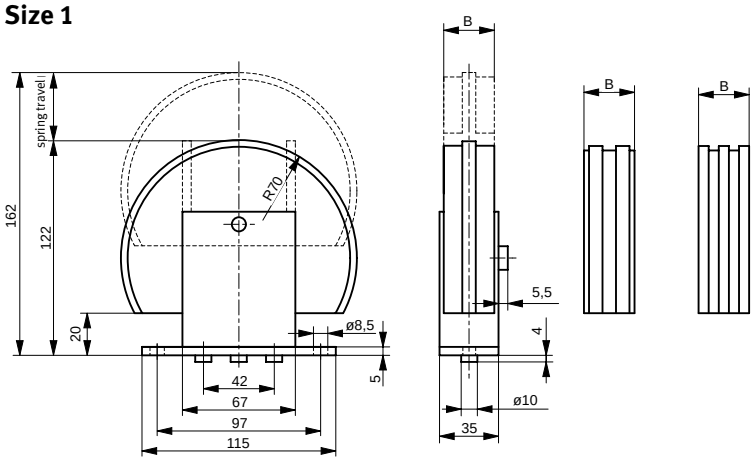

Size 2

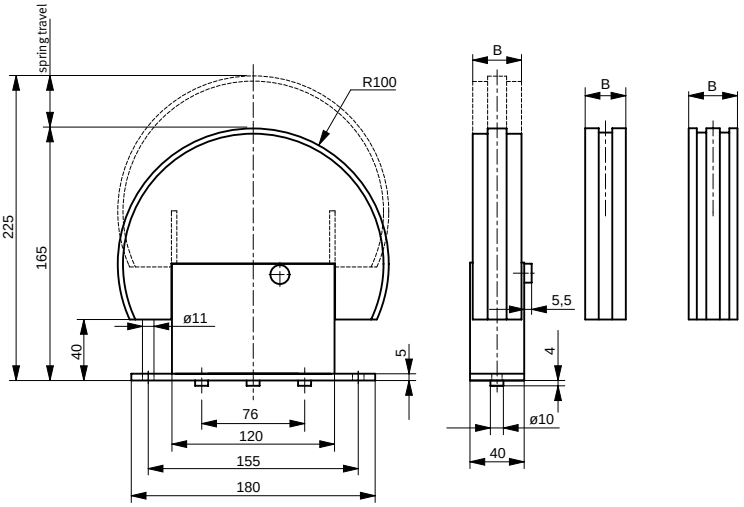

Spring force values for Size 1

spring force	heavy-duty N	spring travel mm
1 spring	132-60	40
2 springs	264-120	
3 springs	396-180	

Spring force values for Size 2

spring force	heavy-duty N	spring travel mm
1 spring	262-118	60
2 springs	524-236	
3 springs	786-354	

SPANN-BOX® Size 1 with return profile

Chain size DIN8187	B mm	Spring force heavy-duty Part no.	Stainless steel spring force heavy-duty Part no.	Availability
06B-1	30	281 010 051	282 010 051	●
08B-1	30	281 010 052	282 010 052	●
10B-1	30	281 010 053	282 010 053	●
12B-1	30	281 010 054	282 010 054	●
16B-1	30	281 010 055	282 010 055	●
06B-2	30	281 010 056	282 010 056	●
08B-2	30	281 010 057	282 010 057	●
10B-2	30	281 010 058	282 010 058	●
12B-2	30	281 010 059	282 010 059	●
06B-3	30	281 010 060	282 010 060	●
08B-3	30	281 010 061	282 010 061	●

● ex stock
○ at short notice on request

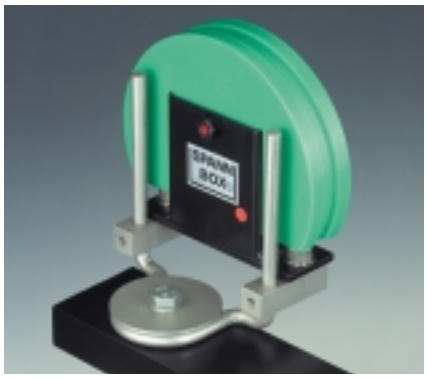

SPANN-BOX® Size 2 with return profile

Chain size DIN8187	B mm	Spring force heavy-duty Part no.	Stainless steel spring force heavy-duty Part no.	Availability
12B-1	33	281 020 045	282 020 045	●
16B-1	33	281 020 046	282 020 046	●
20B-1	33	281 020 047	282 020 047	●
08B-2	33	281 020 048	282 020 048	●
10B-2	33	281 020 049	282 020 049	●
12B-2	33	281 020 050	282 020 050	●
08B-3	33	281 020 051	282 020 051	●
10B-3	40	281 020 052	282 020 052	○
12B-3	45	281 020 053	282 020 053	○

Special designs on request

● ex stock
○ at short notice on request

Fixing method

Fixing brackets from our standard range allow easy installation and adjustments of the SPANN-BOX® up to 67mm / 75mm respectively once spring travel has been fully taken up. SMART MATE®, our ancillary fixing set, allows easy and flexible SPANN-BOX® installation (see pp 229–236).

SPANN-BOX® with Block Profile

Size 2

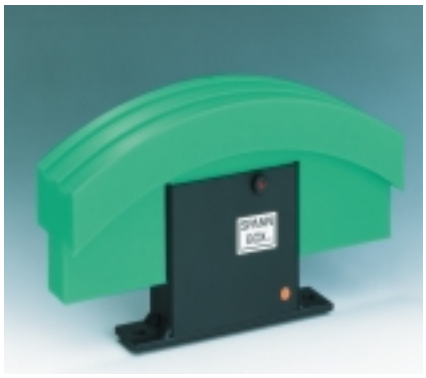

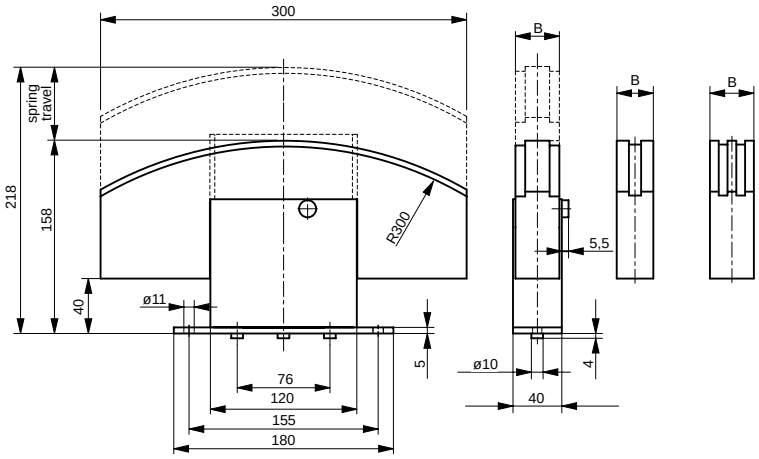

Standard design

Robust design with steel casing. Suitable for high stresses where the tensioner is subjected to high dynamic loads, so this design is available with heavy-duty spring force only. Slide profile and spring core are made in one piece to ensure maximum stability. For optimum support of large pitch chains, the slide profile has been increased to 300mm.

Chain guide

All roller chains run on plastic guide profiles.

Spring force

Three pre-tensioned compression springs can be individually released to generate the spring force required.

Fixing method

Fixing brackets from our standard range allow easy installation. Spring travel adjustment up to 75mm is possible once initial spring travel has been fully taken up.
Why not benefit from our installation system? For further details, please see pp 229–236.

Spring force values

spring force	heavy-duty N	spring travel mm
1 spring	262-118	60
2 springs	524-236	
3 springs	786-354	

Chain size DIN8187	B mm	Spring force heavy-duty Part no.	Stainless steel spring force heavy-duty Part no.	Availability
24B-1	33	281 020 054	282 020 054	●
28B-1	33	281 020 055	282 020 055	●
32B-1	33	281 020 056	282 020 056	●
40B-1	40	281 020 057	282 020 057	○
48B-1	45	281 020 058	282 020 058	○
16B-2	45	281 020 059	282 020 059	○
20B-2	55	281 020 060	282 020 060	○
24B-2	70	281 020 061	282 020 061	○
16B-3	75	281 020 062	282 020 062	○
20B-3	90	281 020 063	282 020 063	○

Special designs on request

● ex stock
○ at short notice on request

Chain Tensioners with Chain Sprocket

for Roller Chains to DIN8187

Wherever tensioners with slide profiles might be a problem (e.g. chain speed too high; small return radii due to lack of space), these designs with chain sprockets are the answer.

SPANN-BOY® with Chain Sprocket

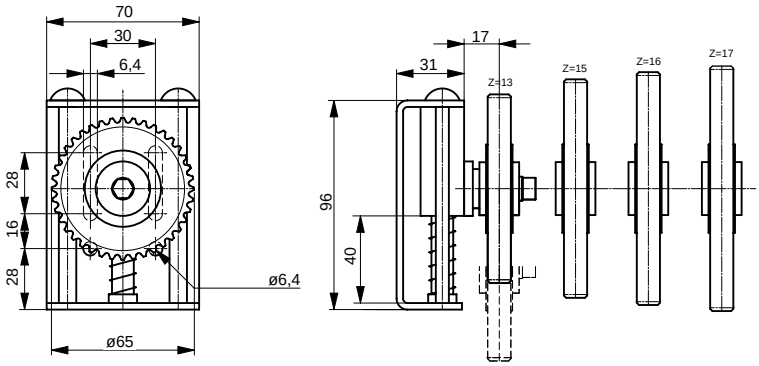

Standard design
Robust design with steel casing.

Fields of application
If there is no space for a standard tensioner, a SPANN-BOY® with chain sprocket solves the problem.

Even at high chain speeds (› 1m/s) or with small return radii, this design with idler sprocket is the answer. Roller chains with an overall width of up to 15mm run in a U-profile.

Spring force
One compression spring (available with heavy-duty spring force only) generates the spring force. Fixing holes in the casing allow adjustment up to 38mm once initial spring travel has been fully taken up.

Spring force values

spring force	heavy-duty N	spring travel mm
1 spring	132-60	40

Chain size DIN8187	No. of teeth	Spring force heavy-duty Part no.	Avail-ability
06-B1	20	281 240 007	●
06-B1	21	281 240 001	●
06-B1	23	281 240 008	●
08B-1	16	281 240 009	●
08B-1	17	281 240 010	●
08B-1	18	281 240 002	●
10B-1	14	281 240 011	●
10B-1	15	281 240 012	●
10B-1	16	281 240 013	●
10B-1	17	281 240 003	●
12B-1	13	281 240 014	●
12B-1	15	281 240 004	●
12B-1	16	281 240 015	●
12B-1	17	281 240 016	●

Special and stainless steel designs on request

● ex stock
○ at short notice on request

Fixing method
SPANN-BOY® with chain sprocket is fitted beside the chain. The holes in its casing permit easy installation.

Installation option
Fitted behind the drive, it allows effective chain tensioning of the nondriving free length in confined spaces.
Shown here: tangentially driven roller conveyor. The lower end of the chain runs in a double-decker chain guide made from Material "S"®

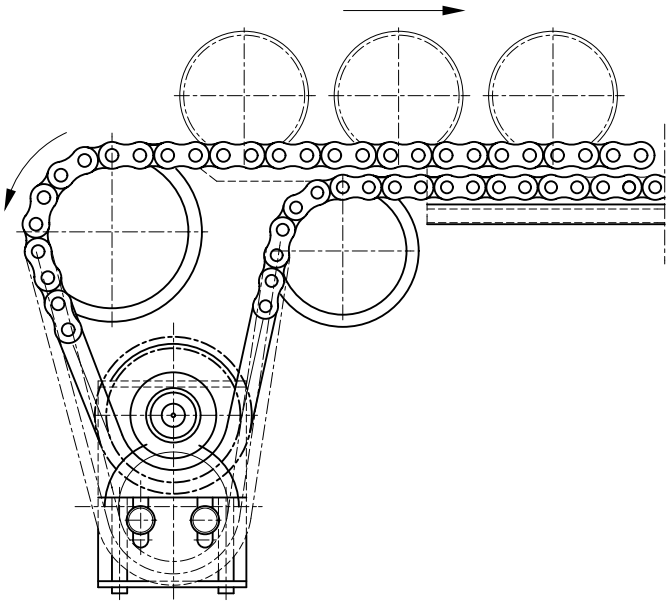

SPANN-BOY® TS with Chain Sprocket

NEW!

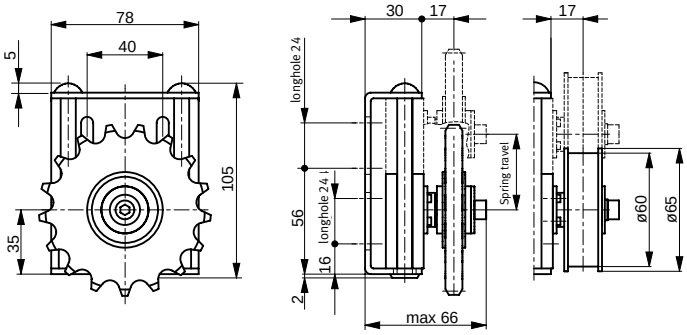

Standard design
Robust design with steel casing.

Fields of application
If there is no space for a standard tensioner, a SPANN-BOY® TS with chain sprocket solves the problem.

Even at high chain speeds (> 1m/s) or small return radii, this design with idler sprocket is the answer. Roller chains with a width of up to 15mm run in U-profiles.

Spring force
Two pre-tensioned compression springs which can be individually released, offer you a choice of light, heavy-duty or extra heavy-duty spring force.

Spring force values

spring force	light N	heavy-duty N	extra heavy-duty N	spring travel mm
1 spring	65-33	165-63	–	40
2 springs	–	–	190-96	40

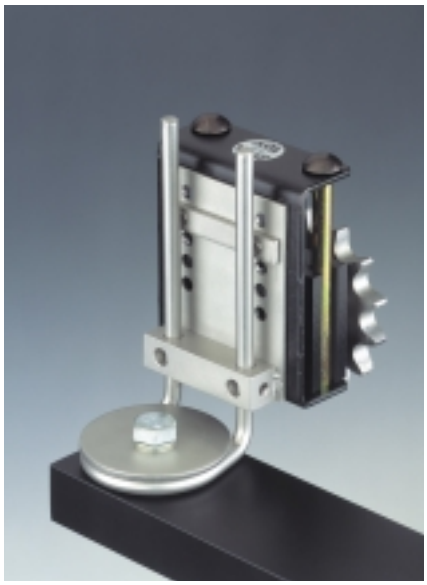

Fixing Method
Configuration and size of the fixing holes in the casing allow easy installation and adjustment up to 40 mm once initial spring travel has been fully taken up.

SMART MATE® our ancillary fixing set, allows easy and flexible SPANN-BOY® TS installation (see pp 229–236).

Chain size DIN 8187	No. of teeth	Spring force light/heavy-duty/ extra heavy-duty Part no.	Avail-ability
06-B1	20	281 260 002	●
06-B1	21	281 260 003	●
06-B1	23	281 260 004	●
08B-1	16	281 260 005	●
08B-1	17	281 260 006	●
08B-1	18	281 260 007	●
10B-1	14	281 260 008	●
10B-1	15	281 260 009	●
10B-1	16	281 260 010	●
10B-1	17	281 260 011	●
12B-1	13	281 260 012	●
12B-1	15	281 260 013	●
12B-1	16	281 260 014	●
12B-1	17	281 260 015	●

Special and stainless steel designs on request

● ex stock
○ at short notice on request

SPANN-BOX® with Chain Sprocket Type K-L / Type K-S

Size 1

Type K-L

Type K-S

Standard design
Robust design with steel casing.

Fields of application
This design with chain sprocket is the answer for applications where using a SPANN-BOX® with slide profile might be problematic (e.g. high chain speeds, small return radii due to lack of space).
Installations with an arc of conduct of 180° compensate a lot of chain stretch (2 x spring travel = 80mm).
Two versions of this design are available, Type K-L or Type K-S, depending on your installation conditions.

Spring force
Three pre-tensioned compression springs (available with heavy-duty spring force only) capable of being individually released, generate the spring force required.

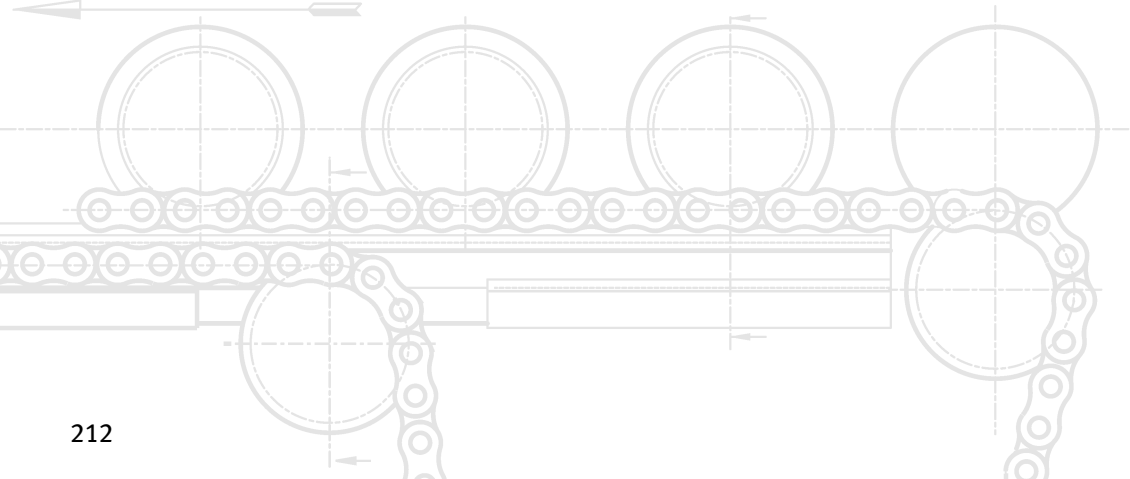

Type K-L
(Chain sprocket on long side)

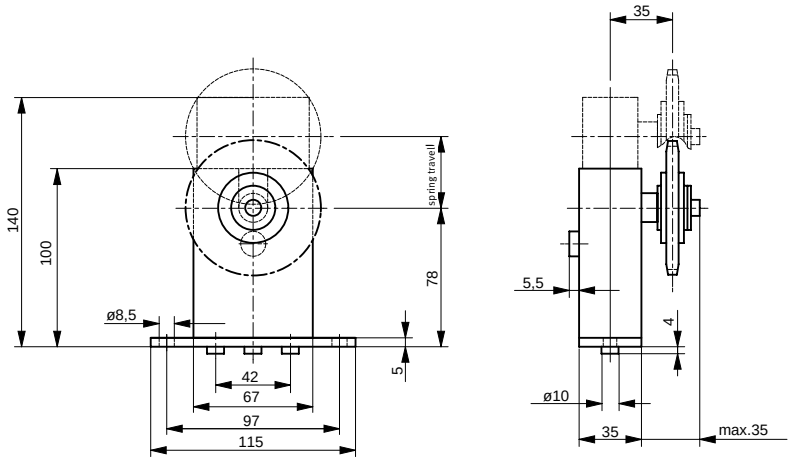

Type K-S
(Chain sprocket on short side)

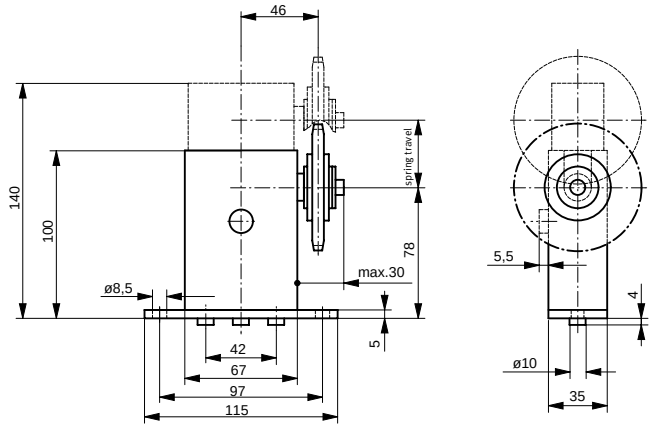

Spring force values

spring force	heavy-duty N	spring travel mm
1 spring	132-60	40
2 springs	264-120	
3 springs	396-180	

Chain size DIN 8187	No. of teeth	Type K-L spring force heavy-duty Part no.	Type K-S spring force heavy-duty Part no.	Avail-ability
06B-1	20	281 210 005	281 210 001	●
06B-1	21	281 210 012	281 210 023	●
06B-1	23	281 210 013	281 210 024	●
08B-1	16	281 210 014	281 210 025	●
08B-1	17	281 210 006	281 210 002	●
08B-1	18	281 210 015	281 210 025	●
10B-1	14	281 210 016	281 210 027	●
10B-1	15	281 210 017	281 210 028	●
10B-1	16	281 210 007	281 210 003	●
10B-1	17	281 210 018	281 210 029	●
12B-1	13	281 210 033	281 210 034	●
12B-1	14	281 210 019	281 210 030	●
12B-1	15	281 210 008	281 210 004	●
12B-1	16	281 210 020	281 210 031	●
12B-1	17	281 210 021	281 210 032	●

Special and stainless steel designs on request

● ex stock
○ at short notice on request

Fixing method

Installation systems from our standard range allow easy installation as well as adjustment of the SPANN-BOX® once spring travel of 40mm inside the chain tensioner has been fully taken up.

SMART MATE®, our ancillary fixing set, allows easy and flexible installation of SPANN-BOX Size 1 Types K-L/K-S (see pp 229–236).

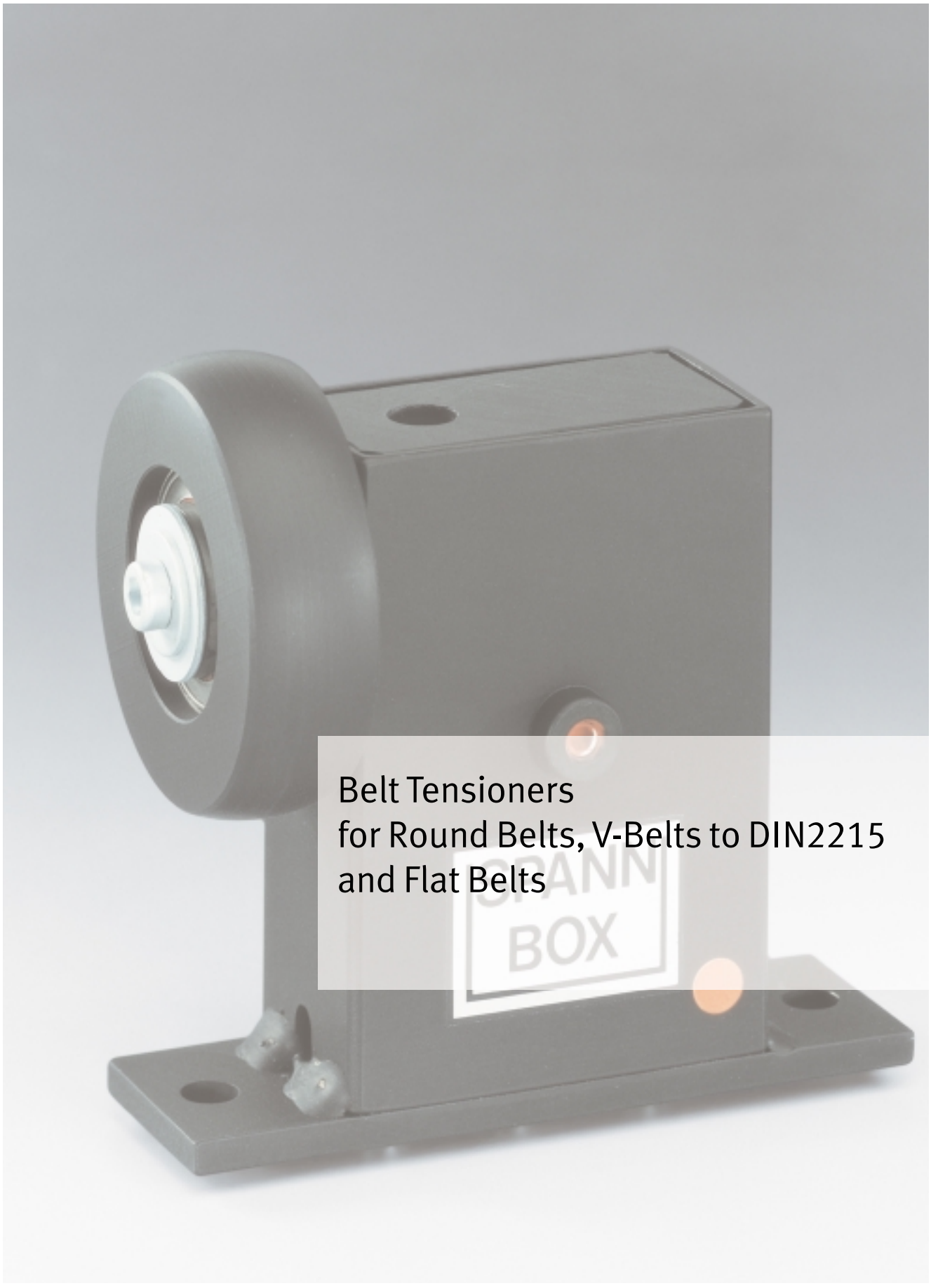

Belt Tensioners
for Round Belts, V-Belts to DIN2215 and Flat Belts

Automatic Belt Tensioners

for Round Belts, V-Belts to DIN2215, Flat Belts

Different drive and conveyor belts have different pre-tensioning requirements. That is why we offer a choice of three different types of casing (SPANN-BOY®, SPANN-BOX® Size 0 and SPANN-BOX® Size 1) with matching tension rollers as standard.

These ball-bearing rollers are made from Original Material "S"® black antistatic and are available either in a cylindrical shape or matching one of the profiles illustrated on the right. When ordering, please add profile form required to the part no.

Profile Forms

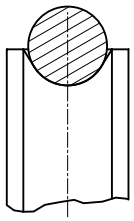

Round Belt (R)

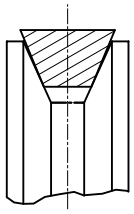

V-Belt (K)

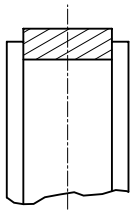

Flat Belt (F)

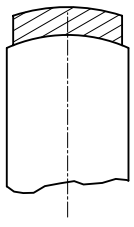

Crown-face Roller (B)

SPANN-BOY® as Belt Tensioner with Roller

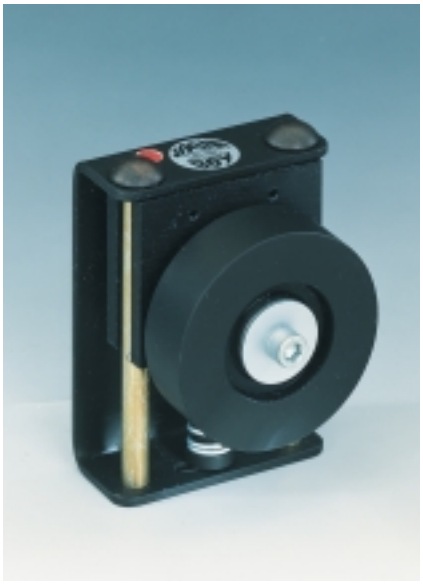

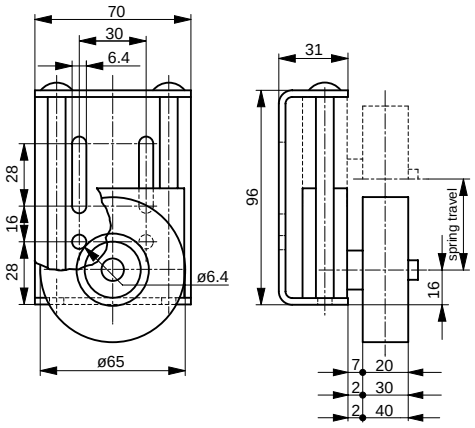

Standard design
Robust design with steel casing. Spring force is generated by a single pre-tensioned spring (light or heavy-duty spring force at your option).

Spring force values

spring force	light N	heavy-duty N	spring travel mm
1 spring	58-32	132-60	40

Roller width mm	Profile form	Spring force light Part no.	Spring force heavy-duty Part no.	Avail-ability
20	cylindrical	281 140 001	281 140 002	●
30	cylindrical	281 140 003	281 140 004	●
40	cylindrical	281 140 005	281 140 006	●
20	crown-face	281 140 007	281 140 008	●
30	crown-face	281 140 009	281 140 010	●
40	crown-face	281 140 011	281 140 012	●
20	flat belt	281 140 013	281 140 014	○
30	flat belt	281 140 015	281 140 016	○
40	flat belt	281 140 017	281 140 018	○
20	V-belt	281 140 019	281 140 020	○
30	V-belt	281 140 021	281 140 022	○
40	V-belt	281 140 023	281 140 024	○
20	round belt	281 140 025	281 140 026	○
30	round belt	281 140 027	281 140 028	○
40	round belt	281 140 029	281 140 030	○

Special and stainless steel designs on request

● ex stock
○ at short notice on request

SPANN-BOY® TS as Belt Tensioner with Roller

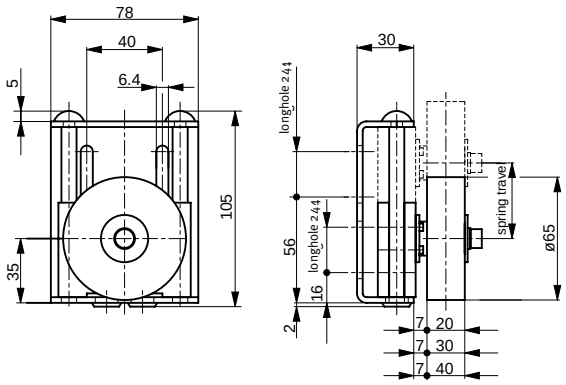

Standard design
Robust design with steel casing.

Fixing method
Configuration and size of the fixing holes in its casing allow easy installation and adjustment up to 40mm once initial spring travel has been fully taken up.
SMART MATE®, our ancillary fixing set, allows easy and flexible SPANN-BOY® TS installation (see pp 229–236).

Spring force
Two pre-tensioned compression springs which can be individually released, offer you a choice of light, heavy-duty or extra heavy-duty spring force.

Spring force values

spring force	light N	heavy-duty N	extra heavy-duty N	spring travel mm
1 spring	65-33	125-63	–	40
2 springs	–	–	190-96	40

Roller width mm	Profile form	Spring force light/heavy-duty/ extra heavy-duty Part no.	Availability
20	cylindrical	281 160 001	●
30	cylindrical	281 160 002	●
40	cylindrical	281 160 003	●
20	crown-face	281 160 004	●
30	crown-face	281 160 005	●
40	crown-face	281 160 006	●
20	flat belt	281 160 007	○
30	flat belt	281 160 008	○
40	flat belt	281 160 009	○
20	V-belt	281 160 010	○
30	V-belt	281 160 011	○
40	V-belt	281 160 012	○
20	round belt	281 160 013	○
30	round belt	281 160 014	○
40	round belt	281 160 015	○

Special and stainless steel designs on request

● ex stock
○ at short notice on request

SPANN-BOX® as Belt Tensioner with Roller

Size 0

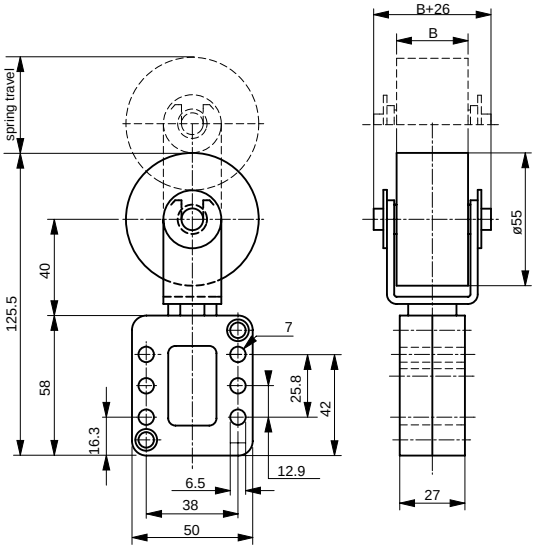

Standard design
This design comes in a corrosion-proof plastic casing.
A spring (pre-set spring force either light or heavy-duty at your option) generates the spring force required.

Spring force values

spring force	light N	heavy-duty N	spring travel mm
1 spring	58-32	132-60	40

Roller width mm	Profile form	Spring force light Part no.	Spring force heavy-duty Part no.	Avail-ability
20	cylindrical	281 100 001	281 100 002	●
30	cylindrical	281 100 003	281 100 004	●
40	cylindrical	281 100 005	281 100 006	●
20	crown-face	281 100 007	281 100 008	●
30	crown-face	281 100 009	281 100 010	●
40	crown-face	281 100 011	281 100 012	●
20	flat belt	281 100 013	281 100 014	○
30	flat belt	281 100 015	281 100 016	○
40	flat belt	281 100 017	281 100 018	○
20	V-belt	281 100 019	281 100 020	○
30	V-belt	281 100 021	281 100 022	○
40	V-belt	281 100 023	281 100 024	○
20	round belt	281 100 025	281 100 026	○
30	round belt	281 100 027	281 100 028	○
40	round belt	281 100 029	281 100 030	○

Special and stainless steel designs on request

● ex stock
○ at short notice on request

SPANN-BOX® as Belt Tensioner with Roller

Size 1

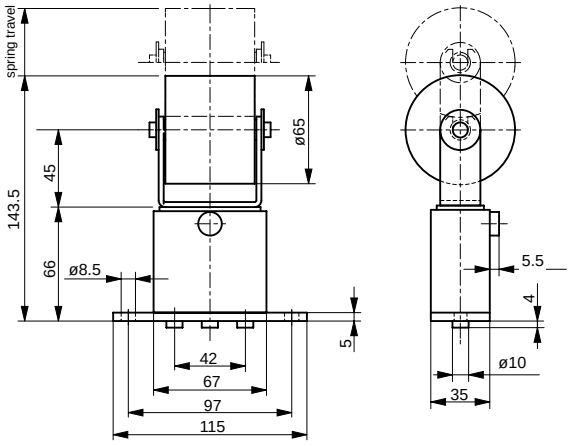

Standard design
Robust design with steel casing.

Spring force
Three pre-tensioned compression springs (spring force either light or heavy-duty at your option) can be individually released to generate the spring force required.

Spring force values

spring force	light N	heavy-duty N	Spring travel mm
1 spring	58-32	132-60	40
2 springs	116-64	264-120	40
3 springs	174-96	396-180	40

Roller width mm	Profile form	Spring force light Part no.	Spring force heavy-duty Part no.	Avail-ability
53	cylindrical	281 110 001	281 110 002	●
53	crown-face	281 110 003	281 110 004	○
53	flat belt	281 110 005	281 110 006	○
53	V-belt	281 110 007	281 110 008	○
53	round belt	281 110 009	281 110 010	○

Special and stainless steel designs on request

● ex stock
○ at short notice on request

Type SR-L

Tension Roller on Long Side

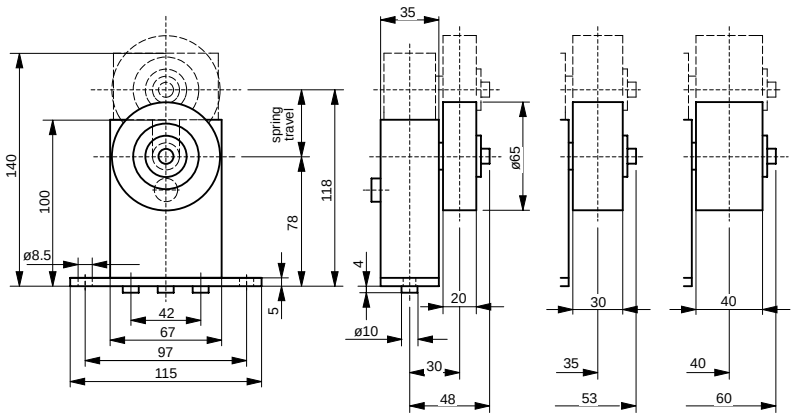

Standard design
Robust design with steel casing.

Spring force
Three pre-tensioned compression springs (spring force either light or heavy-duty at your option) can be individually released to generate the spring force required.

Roller width mm	Profile form	Spring force light Part no.	Spring force heavy-duty Part no.	Avail-ability
20	crown-face	281 110 017	281 110 018	●
20	flat belt	281 110 023	281 110 024	○
20	V-belt	281 110 029	281 110 030	○
20	round belt	281 110 035	281 110 036	○
20	cylindrical	281 110 011	281 110 012	●
30	crown-face	281 110 019	281 110 020	●
30	flat belt	281 110 025	281 110 026	○
30	V-belt	281 110 031	281 110 032	○
30	round belt	281 110 037	281 110 038	○
30	cylindrical	281 110 013	281 110 014	●
40	crown-face	281 110 021	281 110 022	●
40	flat belt	281 110 027	281 110 028	○
40	round belt	281 110 033	281 110 034	○
40	round belt	281 110 039	281 110 040	○
40	cylindrical	281 110 015	281 110 016	●

Special and stainless steel designs on request

● ex stock
○ at short notice on request

Type SR-S

Tension Roller on Short Side

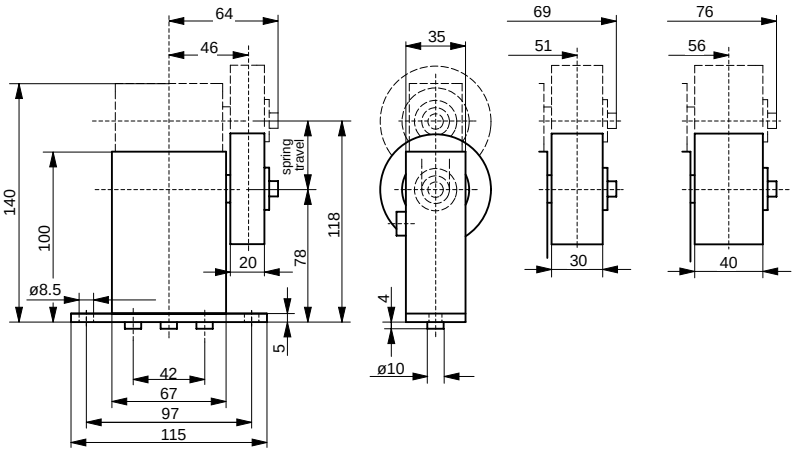

Standard design
Robust design with steel casing.

Spring force
Three pre-tensioned compression springs (spring force either light or heavy-duty at your option) can be individually released to generate the spring force required.

Roller width mm	Profile form	Spring force light Part no.	Spring force heavy-duty Part no.	Avail-ability
20	crown-face	281 110 047	281 110 048	●
20	flat belt	281 110 053	281 110 054	○
20	V-belt	281 110 059	281 110 060	○
20	round belt	281 110 065	281 110 066	○
20	cylindrical	281 110 041	281 110 042	●
30	crown-face	281 110 049	281 110 050	●
30	flat belt	281 110 055	281 110 056	○
30	V-belt	281 110 061	281 110 062	○
30	round belt	281 110 067	281 110 068	○
30	cylindrical	281 110 043	281 110 044	●
40	crown-face	281 110 051	281 110 052	●
40	flat belt	281 110 057	281 110 058	○
40	roundbelt	281 110 063	281 110 064	○
40	round belt	281 110 069	281 110 070	○
40	cylindrical	281 110 045	281 110 046	●

Special and stainless steel designs on request

● ex stock
○ at short notice on request

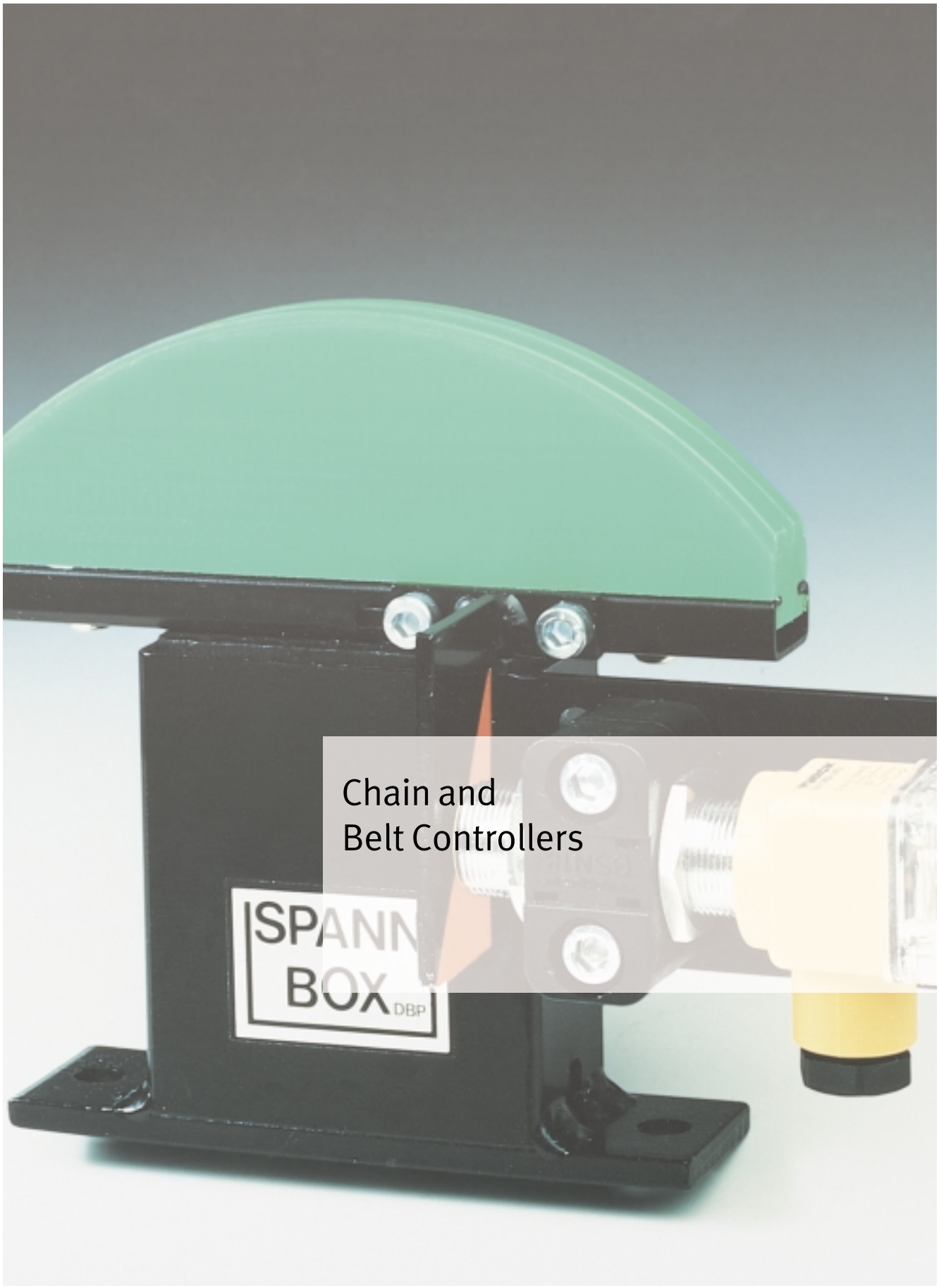

Chain and Belt Controllers

97.5
12
21
26
5
5
33
12
61.5
7
60°
90°
26
10
(1)
22.5
3
M5 15tief

657
610
536.795
58°
24x10.955 (=262.92)
10.955
24x10.955 (=26
14
30
560

Chain and Belt Controllers

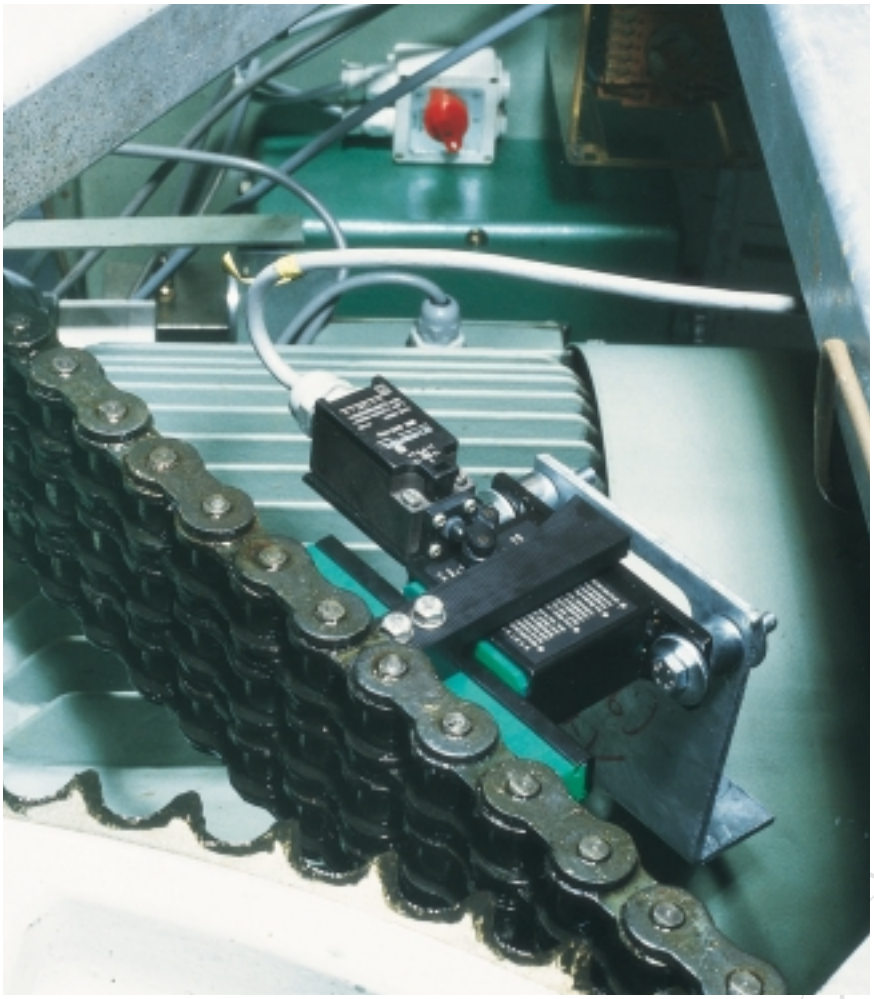

Incorporating mechanical limit switches or inductive proximity switches turns Murtfeldt's chain and belt tensioners into controllers capable of monitoring the smooth running of your production process. By activating a warning or triggering a machine shutdown in case of excessive chain/belt elongation or even rupture, they can help prevent serious damage.

In view of our clients' widely varying needs as to their preferred type of switch, please specify your individual requirements in detail to enable us to suggest a solution tailor-made for you.

Some possibilities are shown overleaf:

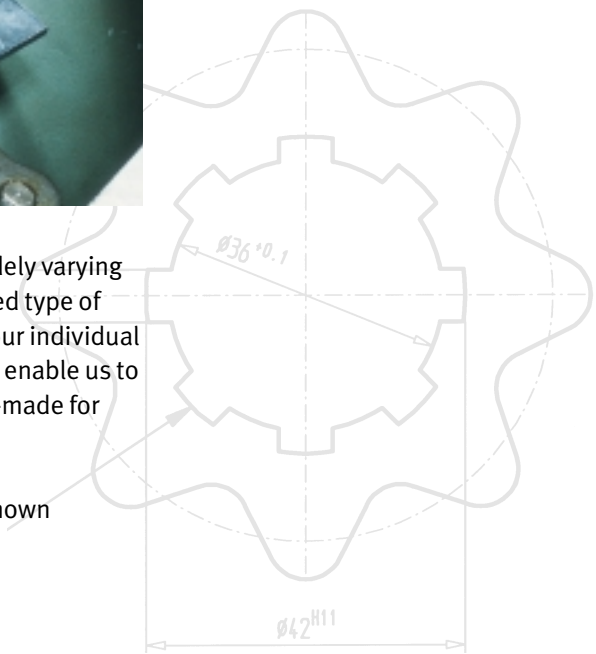

SPANN-BOY® TS with Mechanical Limit Switch

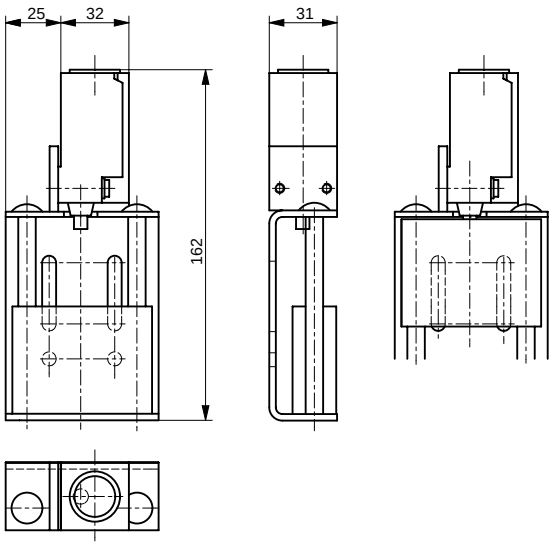

Function
For SPANN-BOY® TS, an add-on limit switch is best. Contact is tripped when the spring core reaches the setbolt of the switch which is either ‘open’ or ‘closed’.

This switch can, for instance, be fitted to models
with arc segment profile (see pg 192)
with chain sprocket (see pg 210)
with belt roller (see pg 218)

Ordering
When ordering, please quote the relevant SPANN-BOY® TS part no. and add ‘mechanical limit switch’. Also please state voltage and ampere rating.

SPANN-BOX® with Mechanical Limit Switch

Sizes 1 and 2

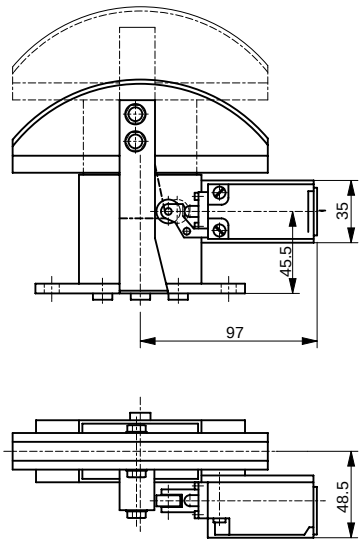

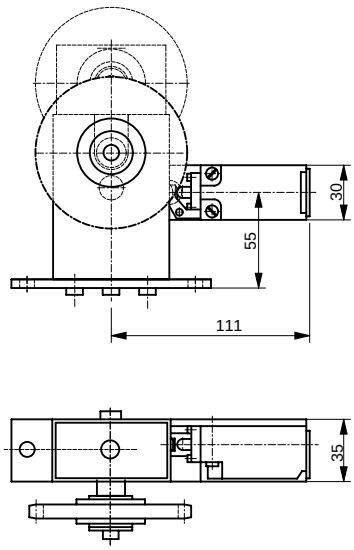

A limit switch fitted laterally is the norm. In the standard version, contact is tripped by a sensor fixed to the slide profile. With SPANN-BOX® Types K-L and SR-L, the side of the casing is opened up and direct contact is made with the spring core. The limit switch is either 'open' or 'closed'.

This switch can, for instance, be fitted to models with arc segment profile (see pp 196–198)
with chain sprocket (see pp 212–214)
with belt roller (see pg 220)

Ordering
When ordering, please quote the relevant SPANN-BOX® part no. and add 'mechanical limit switch'. Also please state voltage and ampere rating.

Inductive Proximity Switch for SPANN-BOX®

Sizes 1 and 2

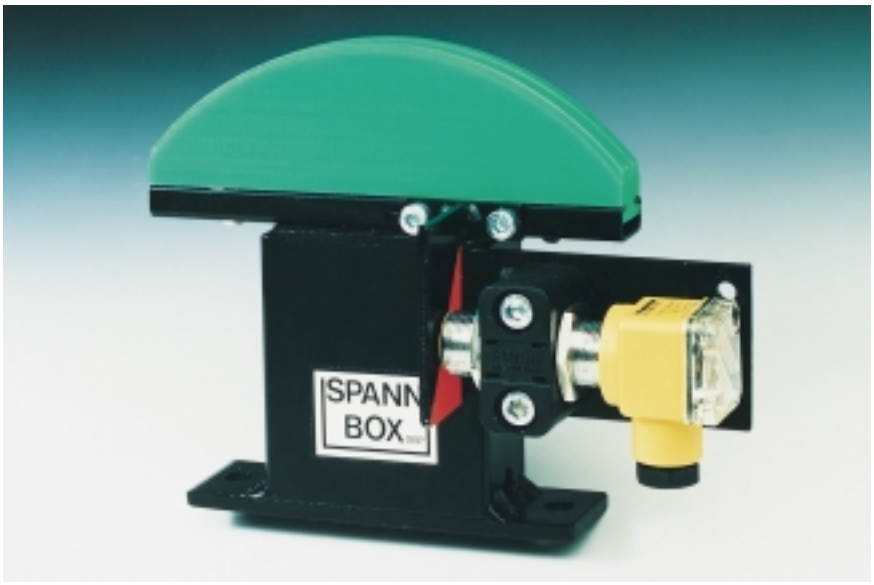

Alternative

Where a mechanical limit switch is not suitable (due to contamination, explosion protection or wear), a proximity switch can be installed for non-contact monitoring. It is either 'open' or 'closed'.

This switch can, for instance, be fitted to SPANN-BOX® Sizes 1 and 2 with arc segment profile (see pp 196–198).

Ordering

When ordering, please quote the relevant SPANN-BOX® Size 1 or 2 part no. and add 'inductive proximity switch'. Also please state voltage and ampere rating.

Special and stainless steel designs on request

Fixing Methods

ø12.5
30°
30°
ø79.5
ø55+0.2 +0.1
15°
24x15°=360°

Installation Systems for SPANN-BOX® /SPANN-BOY® TS

NEW!

To make it even easier to fit SPANN-BOX® Sizes 0, 30, 1 and 2 as well as SPANN-BOY®TS, we offer ancillary installation systems which also permit flexible readjustment/ correcting of their positions.

Since they can be fitted horizontally or vertically, upgrading an existing installation is no problem, either.

Two different systems are available:

SMART MATE®
for SPANN-BOX® Sizes 0, 30, 1
SPANN-BOY® TS

Fixing Brackets
for SPANN-BOX® Sizes 1 and 2

This is what they offer you:

- One central bolt fixes your chosen system
- Infinitely variable adjustment in both horizontal and vertical positions by max. 180mm
- Assembly can be swivelled by 360° for optimum positioning
- Various options of fitting these systems to tensioners
- All parts are made from stainless steel

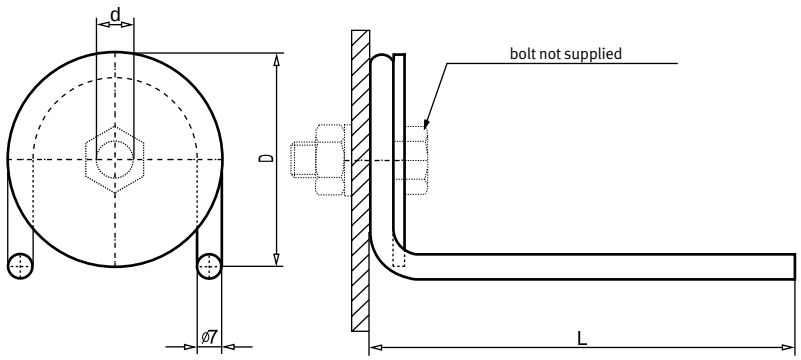

To make it even easier to fit SPANN-BOX® Sizes 0, 30, 1 and 2 as well as SPANN-BOY®TS, we offer SMART MATE®. All installation systems are supplied as complete sets for either horizontal or vertical positioning.

Set SMART MATE® for SPANN-BOY® TS

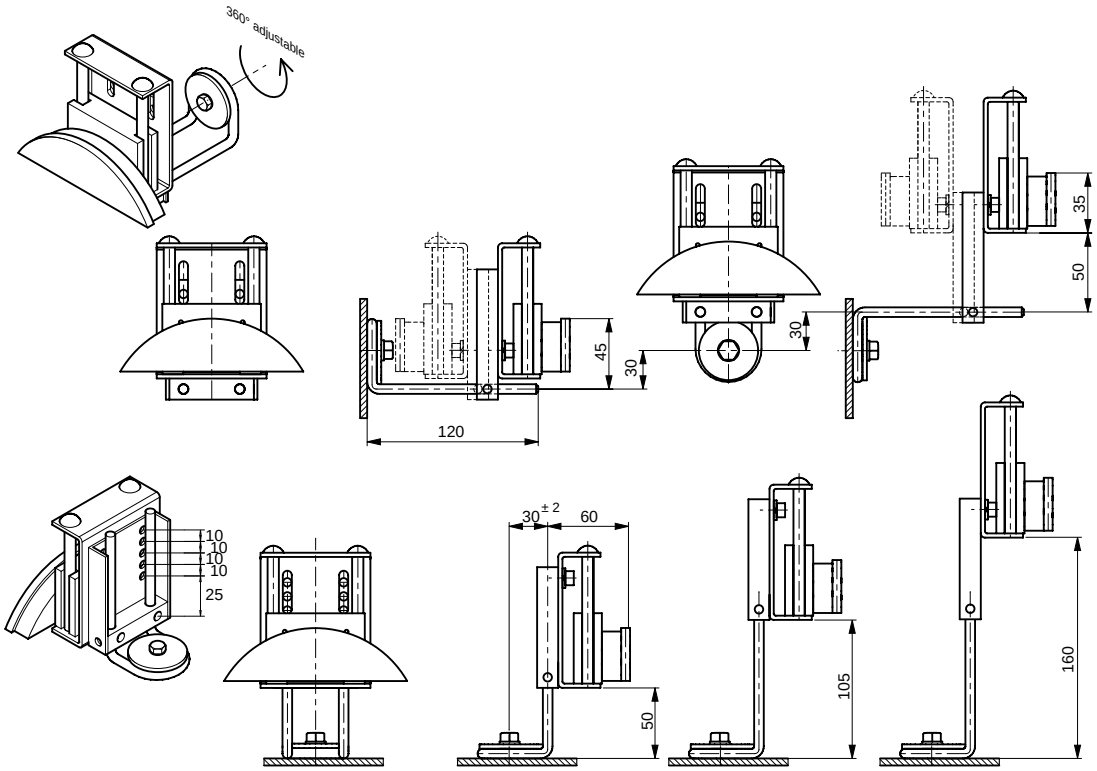

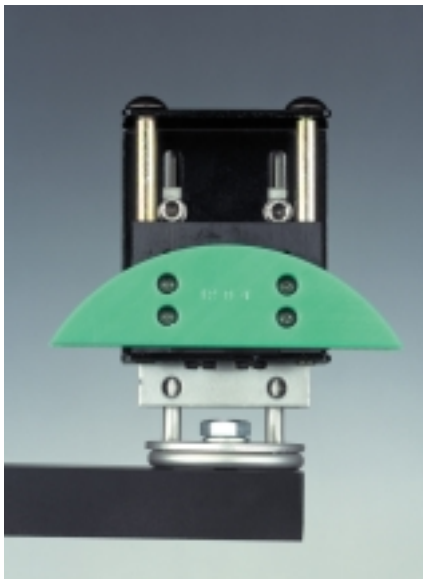

D mm	L mm	d mm	Part no.	Availability
60	120	10.5	281 090 026	●

● ex stock
○ at short notice on request

Set SMART MATE® for SPANN-BOX®

Size 0

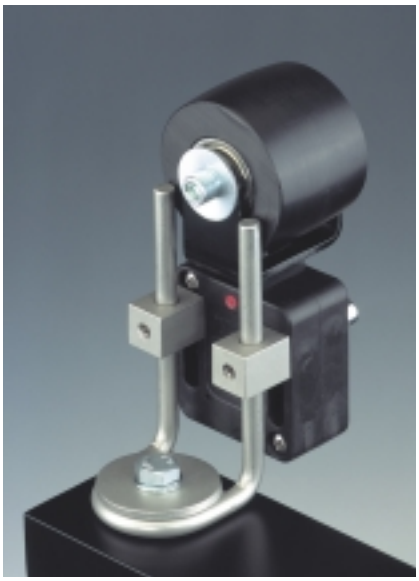

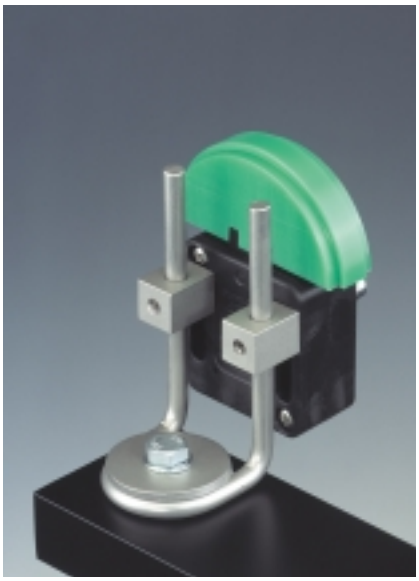

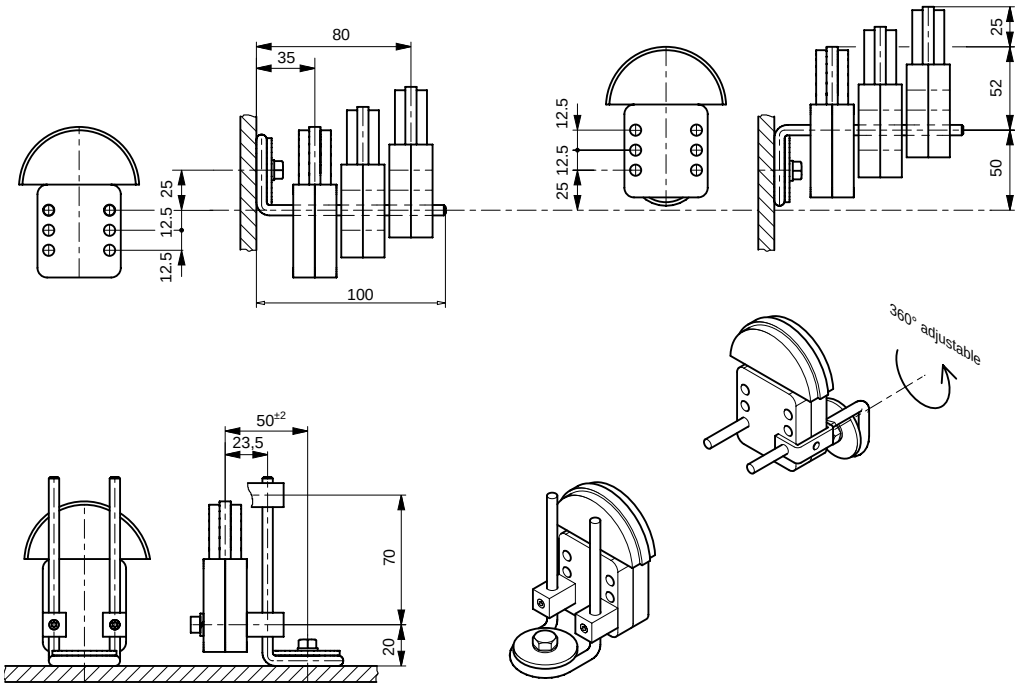

D mm	L mm	d mm	Part no.	Availability
40	100	8.5	281 090 023	●

● ex stock
○ at short notice on request

Set SMART MATE® for SPANN-BOX®

Size 30

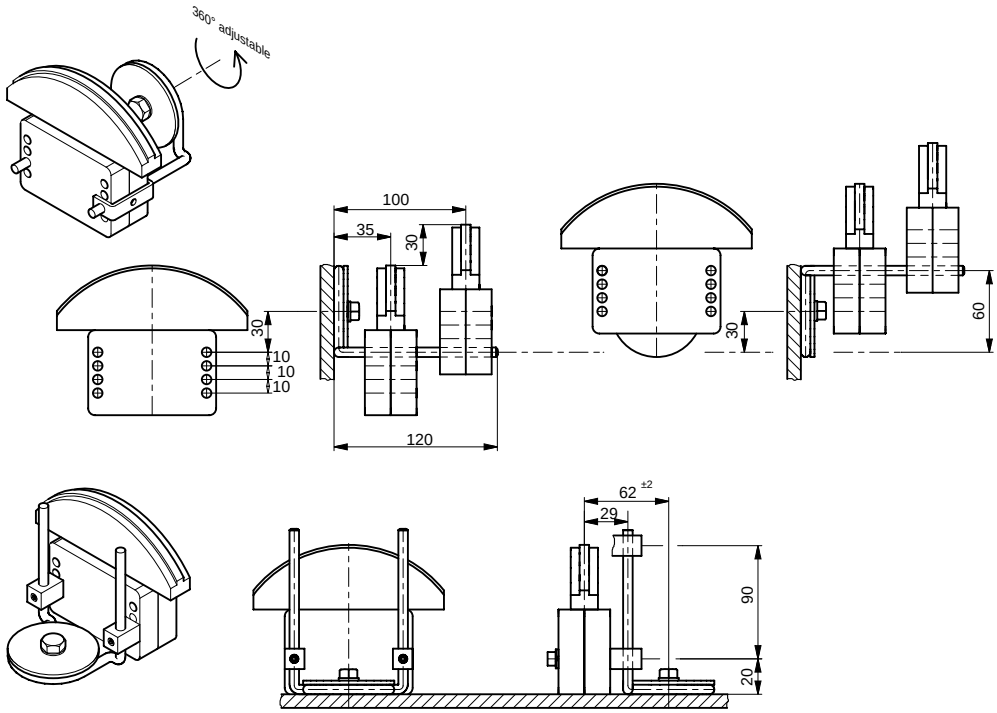

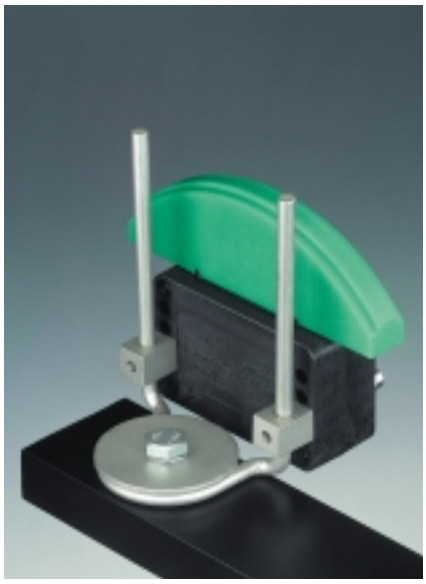

D mm	L mm	d mm	Part no.	Availability
60	120	10.5	281 090 025	●

● ex stock
○ at short notice on request

Set SMART MATE® for SPANN-BOX®

Size 1

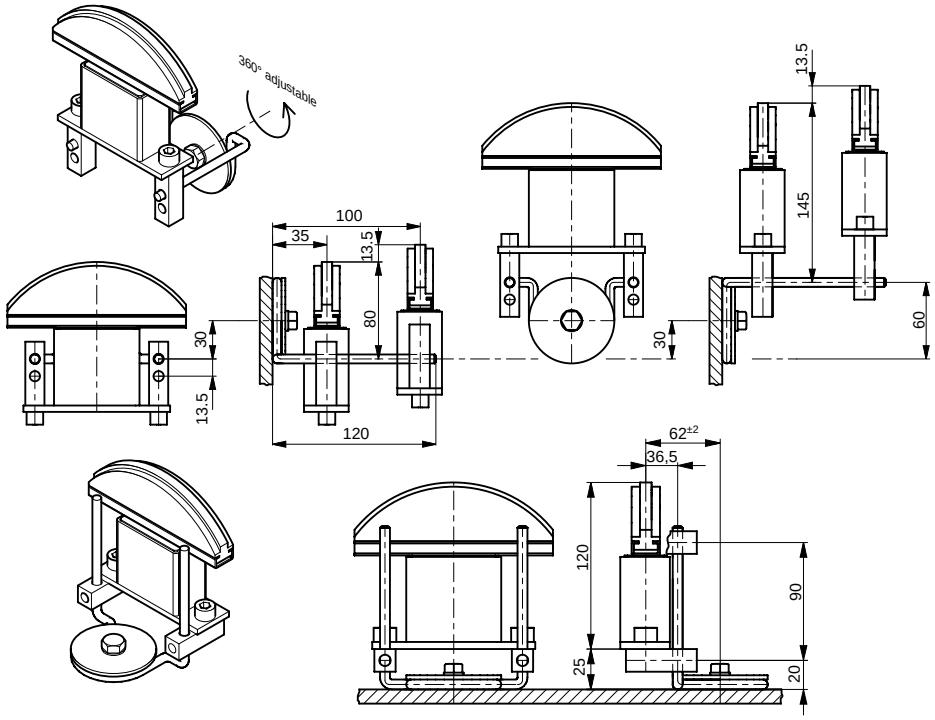

D mm	L mm	d mm	Part no.	Availability
60	120	10.5	281 090 024	●

● ex stock
○ at short notice on request

Fixing Brackets

The Ideal Fixing Method for SPANN-BOX® Sizes 1 and 2

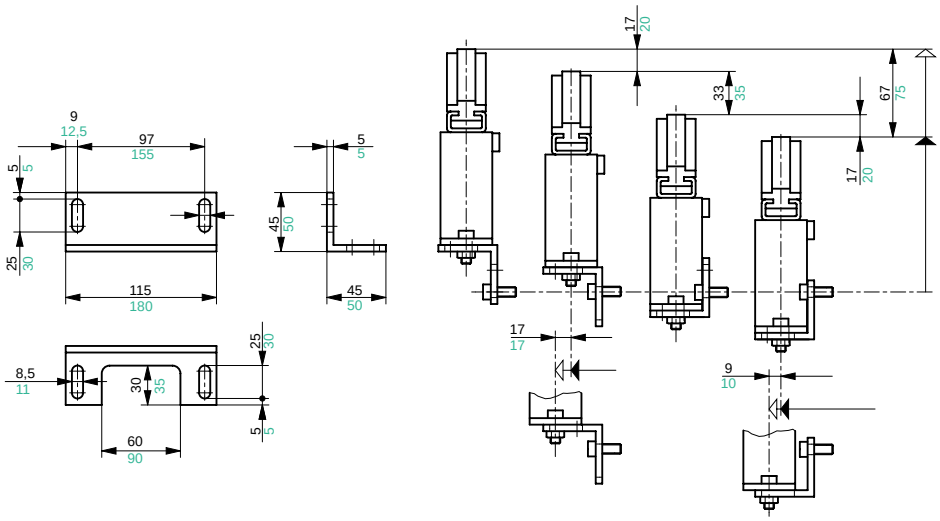

Dimensions in green apply to SPANN-BOX® Size 2

Fixing brackets make installation of SPANN-BOX® Sizes 1 and 2 easier. Their elongated holes allow readjustments of 67/75mm respectively once initial spring travel has been taken up. Lateral adjustments also correct misalignment.

Optional readjustments for brackets (lacquered)	for Size	Part no.	Availability
by 67mm	1	281 090 001	●
by 75mm	2	281 090 002	●
for brackets (V2A)			
by 67mm	1	281 090 029	○
by 75mm	2	281 090 030	○

● ex stock
○ at short notice on request

Special Orders

R69
R35
A

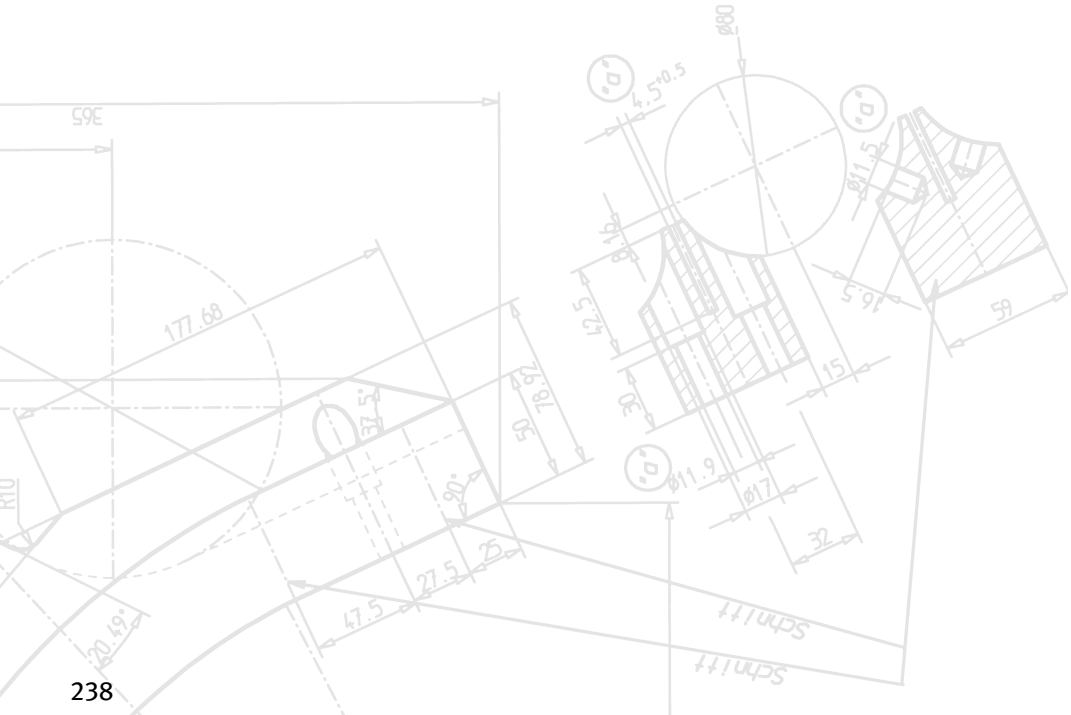
365
177.68
R10
37.5°
78.92
50
90°
25
27.5
47.5
20.49°
Ø80
4.5+0.5
8.16
42.5
30
Ø11.9
Ø17
32
15
16.5
Ø11.5
59
Schnitt
Schnitt

Tandem Tensioner with Slide Profile

for SPANN-BOX® Sizes 1 and 2

Some applications require individual solutions. Large-pitch chains, for instance, may need a tensioner with a longer slide profile than that of the standard version. For such cases, the solution is relatively easy: simply to fit the longer profile required to bridge across, say, two SPANN-BOX® units, thus forming a tandem tensioner.
Do you need custom advice? We will be glad to develop a custom tensioning system for you.

SPANN-BOY®

Twin Combination

This design offers higher spring forces than the maximum ratings of standard SPANN-BOY® and SPANN-BOY® TS.
Do you need custom advice?
We will be glad to develop a custom tensioning system for you.

Ø36 *0.1
Ø42H11

A
Ø50
45°
R6
A
330

Chain Racks

Chain Racks

– the low-cost alternative to milled racks

Murtfeldt roller chain racks are low-cost, easy-to-instal and easy-to-adjust alternatives to milled racks.

Roller chain racks are less susceptible to variations in tooth play. Misalignments, for instance, can be compensated by a lower chain sprocket width.

The system
The roller chain, pre-stretched to 40% of its breaking strength, runs through a cage profile for the whole of its length. It is fastened at one end to an anchor plate and at the other to a tensioning bolt set by a simplex connecting link.

For chains over 2500mm, additional fixing brackets are integrated into the chain rack using duplex connecting links to prevent the chain rack shifting in the cage profile during start-up and braking.

Running the chain through a cage profile made from Material "S"®1000 green results in significant noise reduction and quiet running compared to milled racks. The cage profile itself is held within a steel C-profile which, in its turn, is clamped down, giving the chain rack high stability and allowing the cage profile to expand under temperature fluctuations.

Our scope of supply comprises all fixing components and chain rack parts including pre-stretched chains and sprockets. Chain rack sizes: ⅝", ¾" and 1" pitch.

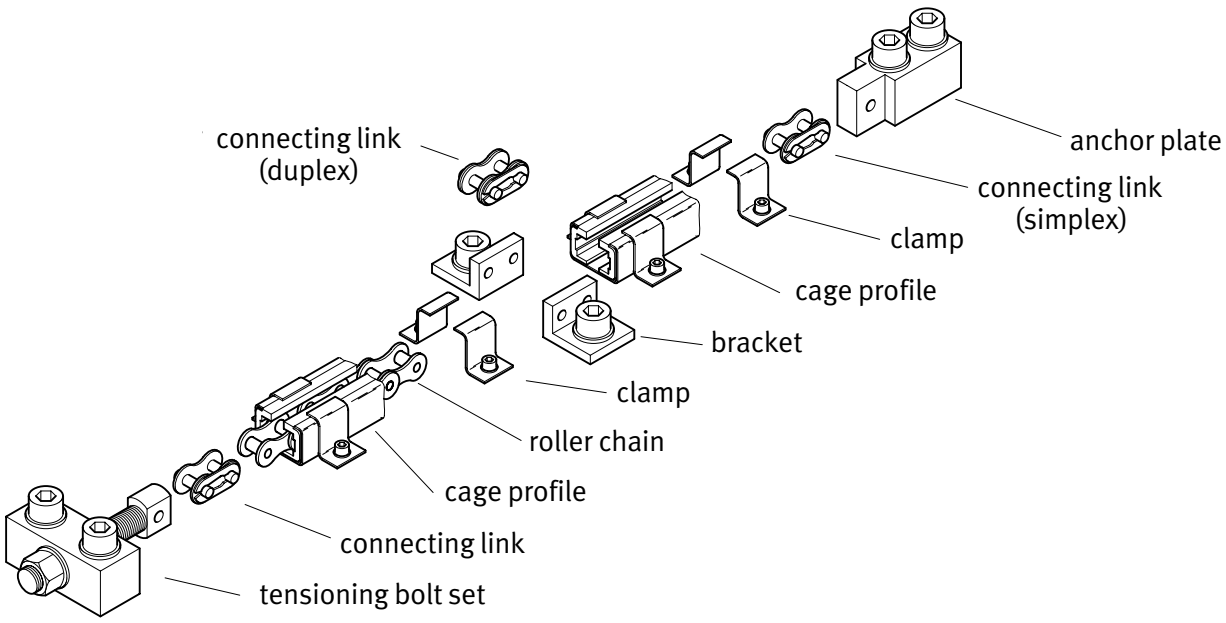

Installation

- Insert each chain length into its cage profile
- Add fixing brackets to these part-lengths using duplex connecting links, but use simplex connecting links for both chain ends
- Bolt end-fittings onto fixing points provided
- Use tensioning nut to pre-tension chain (already 40% pre-stretched), following starting torque values shown in table
- Precisely align rack and mark drill holes for fixing brackets
- Loosen nut again, drill holes and fit thread
- Tension chain again observing starting torque values
- Bolt on fixing brackets
- Clamp down cage profile
- When installing your chain sprocket drive, please allow for the requisite play between dedendum and chain roller

Chain type DIN 8187	Chain pitch in.	Starting torque tensioning nut	Play between dedendum/chain roller
08B-1	½"	3 – 5Nm	0.3 – 0.5mm
10B-1	⅝"	3 – 8Nm	0.3 – 0.5mm
12B-1	¾"	8 –13Nm	0.3 – 0.6mm
16B-1	1"	22 – 30Nm	0.4 – 0.8mm

Maximum Drive Power

(Peripheral Force at Chain Sprocket)

1. **Select the chain rack size to match the peripheral force required at the chain sprocket**

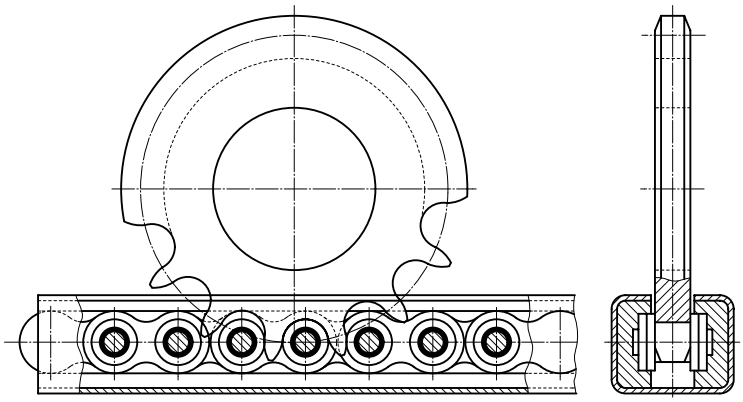

The peripheral forces shown in the table are maximum values. Taking start-up and brake torques into account, they should not be exceeded by more than 25%.

Chain pitch p - ..... mm

Chain type DIN8187	max. Peripheral force	Chain pitch in.	Chain pitch p mm
08B-1	2700N	½"	12.7
10B-1	3300N	⅝"	15.9
12B-1	4300N	¾"	19.1
16B-1	9000N	1"	25.4

We will be glad to do these calculations for you – free of charge and without obligation, of course.

2. Select a suitable chain sprocket

pitch circle d_O =.....mm

In order to improve the approach conditions, the chain sprocket should be the trundle wheel type (a special form of tooth). 19 teeth or more are recommended; 15 teeth should be regarded as the lower limit.

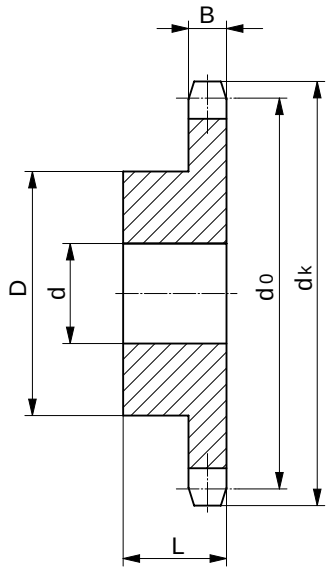

Range of Standard Chain Sprockets

Chain type DIN8187	max. Peripheral force	No. of teeth	mm	d_o mm	d_k mm	D_{max} mm	L_{max} mm	B_{max} Part no.	Availability
		12.7mm ½" (08B-1)							
08B-1	2700N	15	60.7	69.1	30.5	25	6.3	354 010 015	●
		17	68.8	77.2	38.5	25	6.3	354 010 005	●
		19	76.8	85.3	46.5	25	6.3	354 010 016	●
		21	84.9	93.4	54.5	25	6.3	354 010 017	●
		23	93.0	101.5	63.0	25	6.3	354 010 018	●
		15.875mm ⅝" (10B-1)							
10B-1	3300N	15	75.8	85.9	45.5	25	8.0	354 010 008	●
		17	85.9	96.0	55.5	25	8.0	354 010 010	●
		19	96.1	106.2	66.0	25	8.0	354 010 019	●
		21	106.2	116.3	76.0	25	8.0	354 010 020	●
		23	116.3	126.4	86.0	25	8.0	354 010 021	●
		19.05mm ¾" (12B-1)							
12B-1	4300N	15	91.0	103.0	45.0	35	9.5	354 010 013	●
		17	103.1	115.1	57.0	35	9.5	354 010 022	●
		19	115.3	127.3	69.0	35	9.5	354 010 023	●
		21	127.4	139.4	81.0	35	9.5	354 010 024	●
		23	139.5	151.5	93.0	35	9.5	354 010 025	●
		25.4mm 1" (16B-1)							
16B-1	9000N	15	121.3	137.2	75.0	40	14.0	354 010 026	●
		17	137.5	153.3	91.0	40	14.0	354 010 027	●
		19	153.7	169.5	107.0	40	14.0	354 010 028	●
		21	169.9	185.7	123.0	40	14.0	354 010 029	●
		23	186.1	201.9	140.0	40	14.0	354 010 030	●

● ex stock
○ at short notice on request

3. State effective length required

Effective length = ... mm

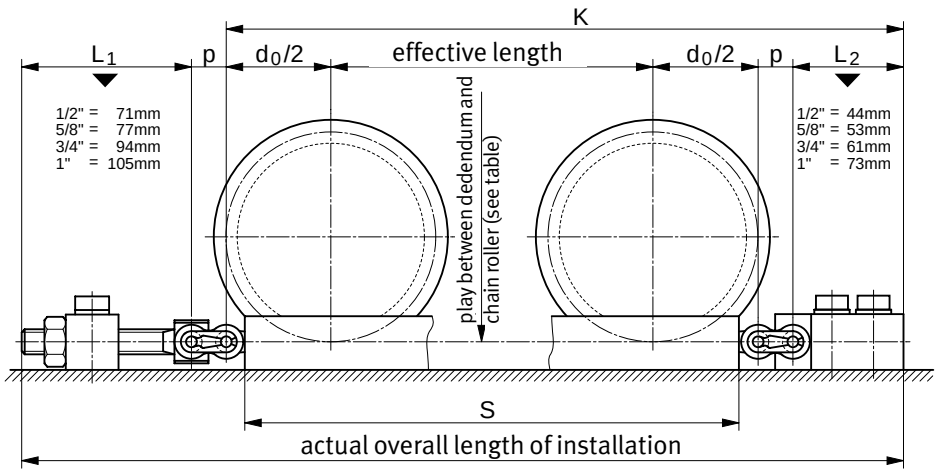

4. Calculate theoretical chain length

Effective length .....*mm*

+ chain sprocket d_0 ..... *mm*

Theoretical chain length ..... *mm*

Chains of more than 2500 mm length have to be subdivided into several sections not exceeding 2500 mm each max. and reconnected to each other by duplex links and fixing brackets.

5. Calculate effective no. of chain links

no. of links = $\frac{\text{theoretical chain length}}{p}$

no. of links = ...

Always round the resultant value up or down to the nearest odd no. of links.

If the chain has been subdivided, divide the total no. of links by the no. of sections.
Standard chain and cage profile lengths for the no. of links calculated are shown in the Selection Chart.

Shorter or longer chain and cage profile lengths should be calculated as follows:

6. Calculate actual chain length 'K'

chain length 'K' = no. of links x p

chain length 'K' = ...mm

7. Calculate cage profile length 'S'

Cage profile length 'S' = 'K' - p

Cage profile length 'S' = ... mm

8. Calculate actual overall length of installation

Actual overall length of installation = 'K' + (2 x p) + L_1 + L_2
Actual overall length of installation = ... mm

Selection Chart

(Effective Chain Length ‘K’ / Cage Profile Length ‘S’)

Our application engineers will be pleased to assist in your chain rack design.
Please contact us.

08B-1	p = 12.7mm		10B-1	p = 15.9mm		12B-1	P = 19.1mm		16B-1	p = 25.4mm	
No. of links	‘K’	‘S’	No. of links	‘K’	‘S’	No. of links	‘K’	‘S’	No. of links	‘K’	‘S’
79	1003.3	990	63	1000.1	984	53	1009.7	990	39	990.6	965
81	1028.7	1016	65	1031.9	1016	55	1047.8	1028	41	1041.4	1016
83	1054.1	1041	67	1063.6	1047	57	1085.9	1066	43	1092.2	1066
85	1079.5	1066	69	1095.4	1079	59	1124.0	1104	45	1143.0	1117
87	1104.9	1092	71	1127.1	1111	61	1162.0	1143	47	1193.6	1168
89	1130.3	1117	73	1158.9	1143	63	1200.2	1181	49	1244.6	1219
91	1155.7	1143	75	1190.6	1174	65	1238.3	1219	51	1295.4	1270
93	1181.1	1168	77	1222.4	1203	67	1276.4	1257	53	1346.2	1320
95	1206.5	1194	79	1254.1	1238	69	1314.5	1295	55	1397.0	1371
97	1231.9	1219	81	1285.9	1270	71	1352.6	1333	57	1447.8	1422
99	1257.3	1244	83	1317.6	1301	73	1390.7	1371	59	1498.6	1473
101	1287.7	1270	85	1349.4	1333	75	1428.8	1409	61	1549.4	1524
103	1308.1	1295	87	1381.1	1365	77	1466.9	1447	63	1600.2	1574
105	1333.5	1320	89	1412.9	1397	79	1505.0	1485	65	1651.0	1625
107	1358.9	1346	91	1444.6	1428	81	1543.1	1524	67	1701.8	1676
109	1384.3	1371	93	1476.4	1460	83	1581.2	1562	69	1752.6	1727
111	1409.7	1397	95	1508.1	1492	85	1619.3	1600	71	1803.4	1778
113	1435.1	1422	97	1539.9	1524	87	1657.4	1638	73	1854.2	1828
115	1460.5	1447	99	1571.6	1555	89	1695.5	1676	75	1905.0	1879
117	1485.9	1473	101	1603.4	1587	91	1733.6	1714	77	1955.8	1930
119	1511.3	1498	103	1635.1	1619	93	1771.7	1752	79	2006.6	1980
121	1536.7	1524	105	1666.9	1651	95	1809.8	1790	81	2057.4	2032
123	1562.1	1549	107	1698.6	1682	97	1847.9	1828	83	2108.2	2082
125	1587.5	1574	109	1730.4	1714	99	1886.0	1866	85	2159.0	2133
127	1612.9	1600	111	1762.1	1746	101	1924.1	1905	87	2209.8	2184
129	1638.3	1625	113	1793.9	1777	103	1962.2	1943	89	2260.6	2235
131	1663.7	1651	115	1825.6	1809	105	2000.3	1980	91	2311.4	2286
133	1689.1	1676	117	1857.4	1841	107	2038.4	2019	93	2362.2	2336
135	1714.5	1701	119	1889.1	1873	109	2076.5	2057	95	2413.0	2387
137	1739.9	1727	121	1920.9	1905	111	2114.6	2095	97	2463.8	2438
139	1765.3	1752	123	1952.6	1936	113	2152.7	2133	99	2514.6	2489
141	1790.7	1778	125	1984.4	1968	115	2190.8	2171	–	–	–
143	1816.1	1803	127	2016.1	2000	117	2228.9	2209	–	–	–
145	1841.5	1828	129	2047.9	2032	119	2267.0	2247	–	–	–
147	1866.9	1854	131	2079.6	2063	121	2305.1	2286	–	–	–
149	1892.3	1879	133	2111.4	2095	123	2343.2	2324	–	–	–
151	1917.7	1905	135	2143.1	2127	125	2381.3	2362	–	–	–
153	1943.1	1930	137	2174.9	2159	127	2419.4	2400	–	–	–
155	1968.5	1955	139	2206.6	2190	129	2457.5	2438	–	–	–
157	1993.9	1980	141	2238.4	2222	131	2495.6	2476	–	–	–
159	2019.3	2006	143	2270.1	2254	–	–	–	–	–	–
161	2044.7	2032	145	2301.9	2286	–	–	–	–	–	–
163	2077.1	2064	147	2333.6	2317	–	–	–	–	–	–
165	2095.5	2082	149	2365.4	2349	–	–	–	–	–	–
167	2120.9	2108	151	2397.1	2381	–	–	–	–	–	–
169	2146.3	2133	153	2428.9	2413	–	–	–	–	–	–
171	2171.7	2159	155	2460.6	2444	–	–	–	–	–	–
173	2197.1	2184	157	2492.4	2476	–	–	–	–	–	–
175	2222.5	2209	–	–	–	–	–	–	–	–	–
177	2247.9	2235	–	–	–	–	–	–	–	–	–
179	2273.3	2260	–	–	–	–	–	–	–	–	–
181	2298.7	2286	–	–	–	–	–	–	–	–	–
183	2324.1	2311	–	–	–	–	–	–	–	–	–
185	2349.5	2336	–	–	–	–	–	–	–	–	–
187	2374.9	2362	–	–	–	–	–	–	–	–	–
189	2400.3	2387	–	–	–	–	–	–	–	–	–
191	2425.7	2413	–	–	–	–	–	–	–	–	–
193	2451.1	2430	–	–	–	–	–	–	–	–	–
195	2476.5	2463	–	–	–	–	–	–	–	–	–
197	2501.9	2489	–	–	–	–	–	–	–	–	–

Calculating a Chain Rack
(Example)

1. Example for lengths up to 2500mm

Peripheral force 2800N
Selected rack size pitch 'p' = ⅝" = 15.875mm
Chain sprocket t= 19, pitch circle Ø d_0 = 96.05mm
Effective length required 1700mm
Theoretical chain length effective length + d_0
= 1700 + 96.05 = 1796.05mm

Effective no. of links

$$= \frac{\text{theoretical chain length}}{p}$$

$$= \frac{1796.050}{15.875} = 113.13 \approx 113 \text{ links}$$

(always odd no. of links)
Actual chain length 'K' = no. of links x p
= 113 x 15.875 = 1793.87mm
Cage profile length 'S' = K – p
= 1793.87 mm – 15.875 =1777.99mm
≈ 1777mm
Actual overall length of installation = K + (2 x p) + L_1 + L_2
= 1793.87 + 31.75 + 77 + 53
= 1955.62mm

2. Example for lengths above 2500mm

Since the recommended max. length of 2500mm has been exceeded, a duplex link and a pair of fixing brackets are required to reconnect the divided rack.

Peripheral force 4100N
Selected rack size pitch 'p' = ¾" =19.05mm
Chain sprocket t= 21, pitch circle Ø d_0 = 127.39mm
Effective length required 3800mm
Theoretical chain length effective length + d_0
= 3800 + 127.39 = 3927.39mm

Effective no. of links

$$= \frac{\text{theoretical chain length}}{p}$$

$$= \frac{3927.39}{19.05} = 206.16 \approx 207 \text{ links}$$

No. of links of half chain

$$= \frac{(\text{total no.} - 1)}{2}$$

$$= \frac{(207 - 1)}{2} = 103 \text{ links}$$

(always odd no. of links)
Actual chain length 'K' = no. of links x p
= 103 x 19.05mm = 1962.15mm
Cage profile length 'S' = K – p
= 1962.15mm – 19.05 = 1943.1mm
≈ 1943mm
Actual overall length of installation = (2 x K) + (3 x p) + L_1 + L_2
= 3924.30 + 57.15 + 94 + 61
= 4136.45mm

Chain Rack Dimensions

08B-1 and 10B-1

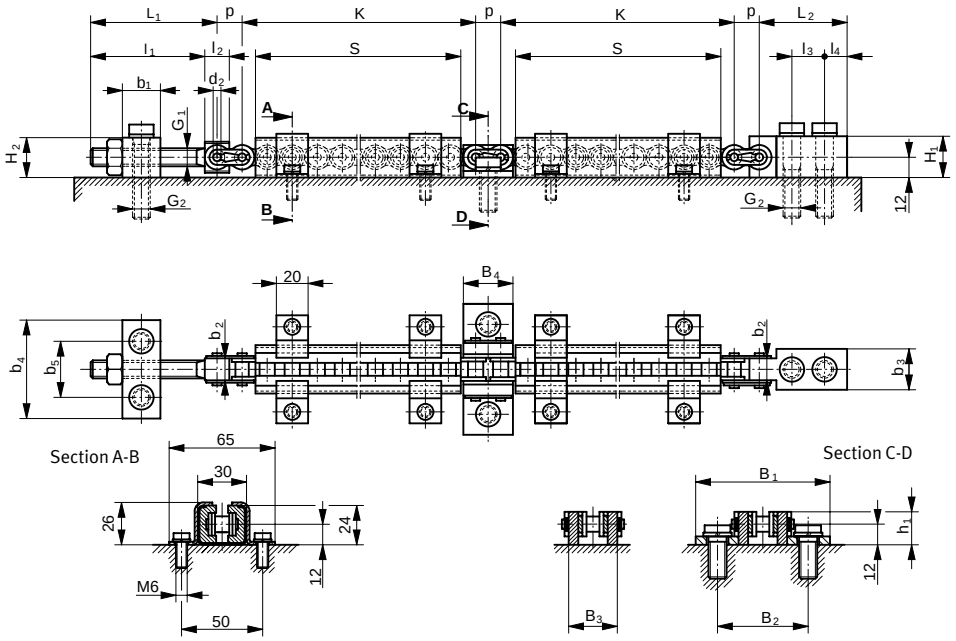

p in.	p mm	ISO No.	C-profile	'K'	'S'	B_1	B_2	B_3	B_4	b_1	b_2	b_3	b_4	b_5	d_2	H_1	H_2	h_1	L_1	L_2	l_1	l_2	l_3	l_4	G_1	G_2
½	12.7	08B-1	C10	to be calc.		70	50	60	22	25	11	20	50	30	4.5	20	25	18	71	44	65	12	18	10	M10	M8
5/16	15.9	10B-1	C10			80	55	30	28	25	13	25	60	35	5	25	25	20	77	53	70	14	20	13	M12	M10

Chain Rack Dimensions

12B-1 and 16B-1

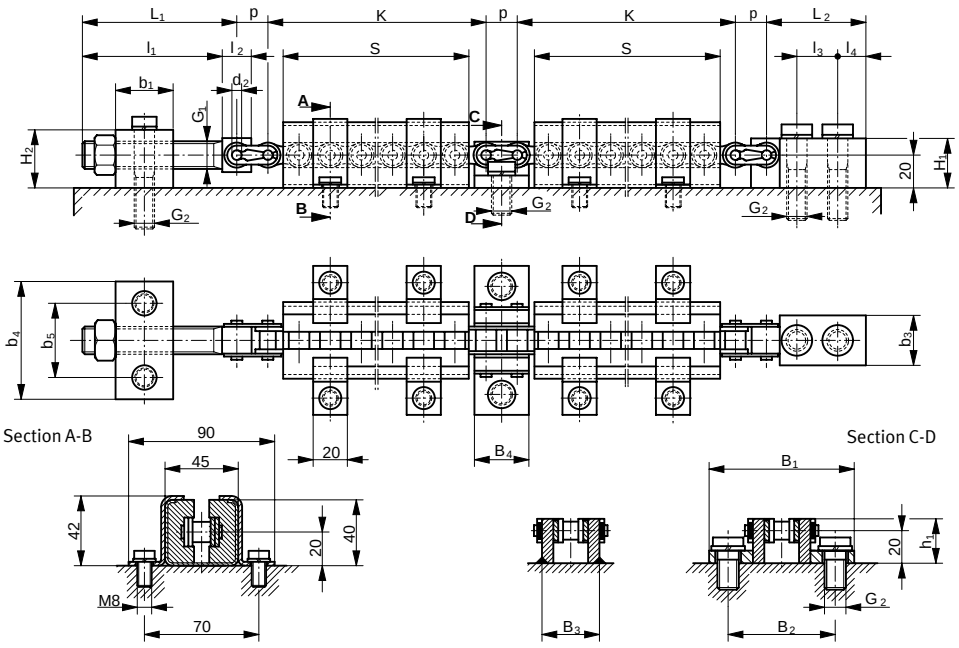

p in.	p mm	ISO No.	C-profile	'K'	'S'	B_1	B_2	B_3	B_4	b_1	b_2	b_3	b_4	b_5	d_2	H_1	H_2	h_1	L_1	L_2	l_1	l_2	l_3	l_4	G_1	G_2
¾	19.1	12B-1	C11	to be calc.		90	65	35	32	35	15	30	70	45	6	30	35	28	94	61	85	18	25	15	M16	M12
1	25.4	16B-1	C11			125	95	56	45	40	25	40	90	55	8.5	40	40	30	105	73	95	20	30	15	M20	M16

Scope of Supply

Description	Unit	Chain rack size ½" / 08B-1 **12.7mm** Part no.	⅝" / 10B-1 **15.9mm** Part no.	¾" / 12B-1 **19.1mm** Part no.	**1"** / 16B-1 **25.4mm** Part no.
Tensioning set	one	353 010 004	353 010 009	353 010 014	353 010 019
Anchor plate	one	353 010 005	353 010 010	353 010 015	353 010 020
Fixing brackets	1 pair	353 010 003	353 010 008	353 010 013	353 010 018
Clamps	1 pair	353 010 001	353 010 026	353 010 029	353 010 002
Cage profile max. undivided length Steel C-profile 6000mm* Material "S"® 1000 green Profile 2000mm	meter	221 320 344	221 320 345	221 320 346	221 320 347
Simplex connecting link	one	353 010 006	353 010 028	353 010 016	353 010 021
Duplex connecting link	one	353 010 007	353 010 012	353 010 017	353 010 022

* Standard steel C-profiles with sendzimir galvanized surfaces;
V2A profiles available ex stock on request

Ordering example for lengths up to 2500mm:

Chain rack 5/8"
for effective length of 1700mm,
chain sprocket t = 19, or
chain rack consisting of:

- 1 off cage profile 5/8", 1777mm long
- 1 off tensioning set
- 1 off anchor plate
- 2 off pairs of clamps
- 1 off roller chain ISO no. 10B, length: 113 links, inside links either side (40% pre-stretched)
- 2 off straight simplex connecting links, ISO no. 10B

Ordering example for lengths above 2500mm:

Chain rack 3/4"
for effective length of 3800mm,
chain sprocket t = 21, or
chain rack consisting of:

- 2 off cage profiles 3/4", 1943mm long
- 1 off tensioning set
- 1 off anchor plate
- 4 off pairs of clamps
- 1 off pair fixing brackets
- 2 off roller chains ISO no. 12B, length: 103 links each, inside links either side (40% pre-stretched)
- 2 off straight simplex connecting links, ISO no. 12B
- 1 off straight duplex connecting link, ISO no. 12B-Duplex

Our application engineers will be glad to assist you in chain rack selection and design.

Manual and Automatic Lubrication Systems

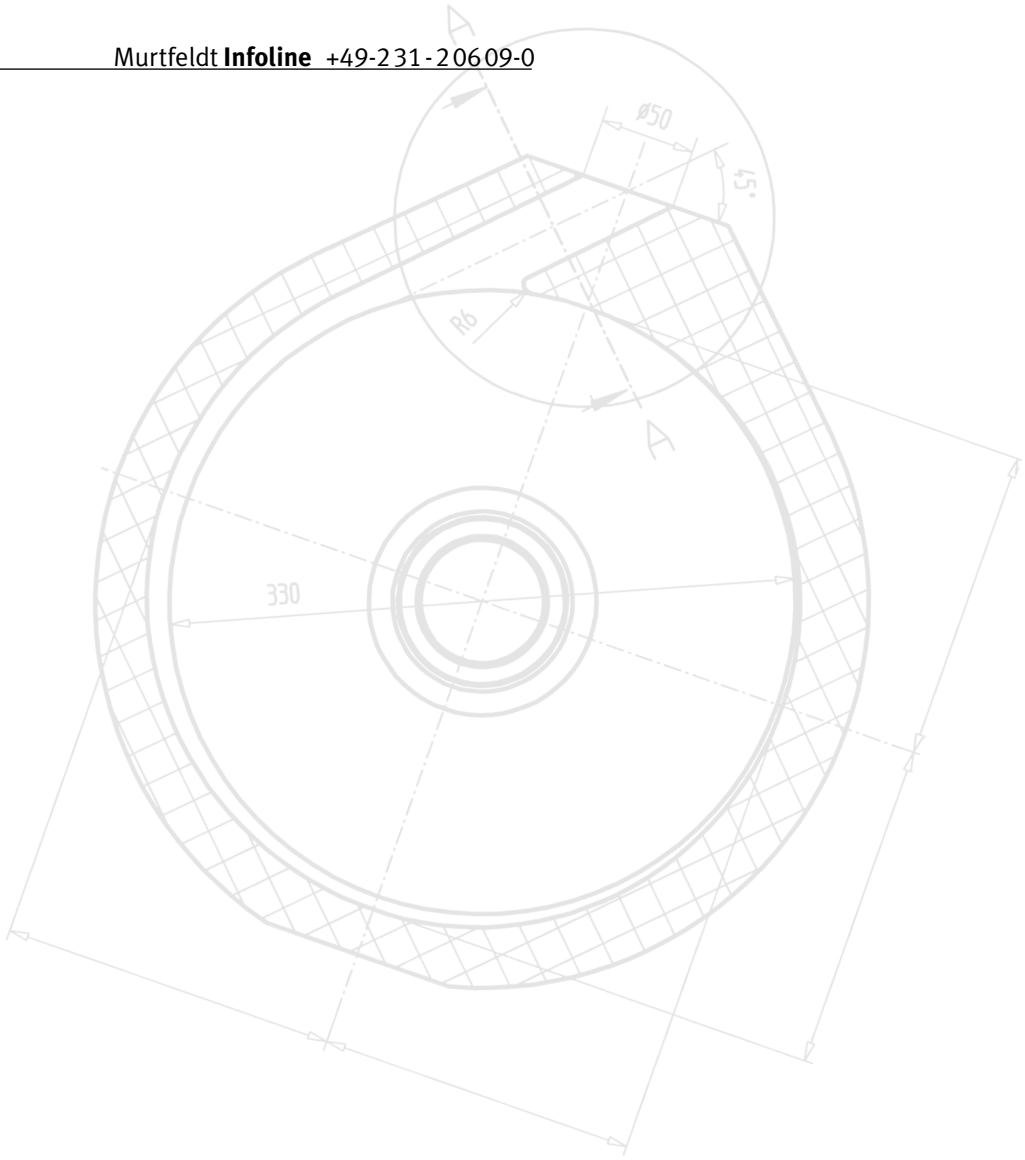
A
Ø50
45°
R6
A
330

Manual and Automatic Lubrication Systems

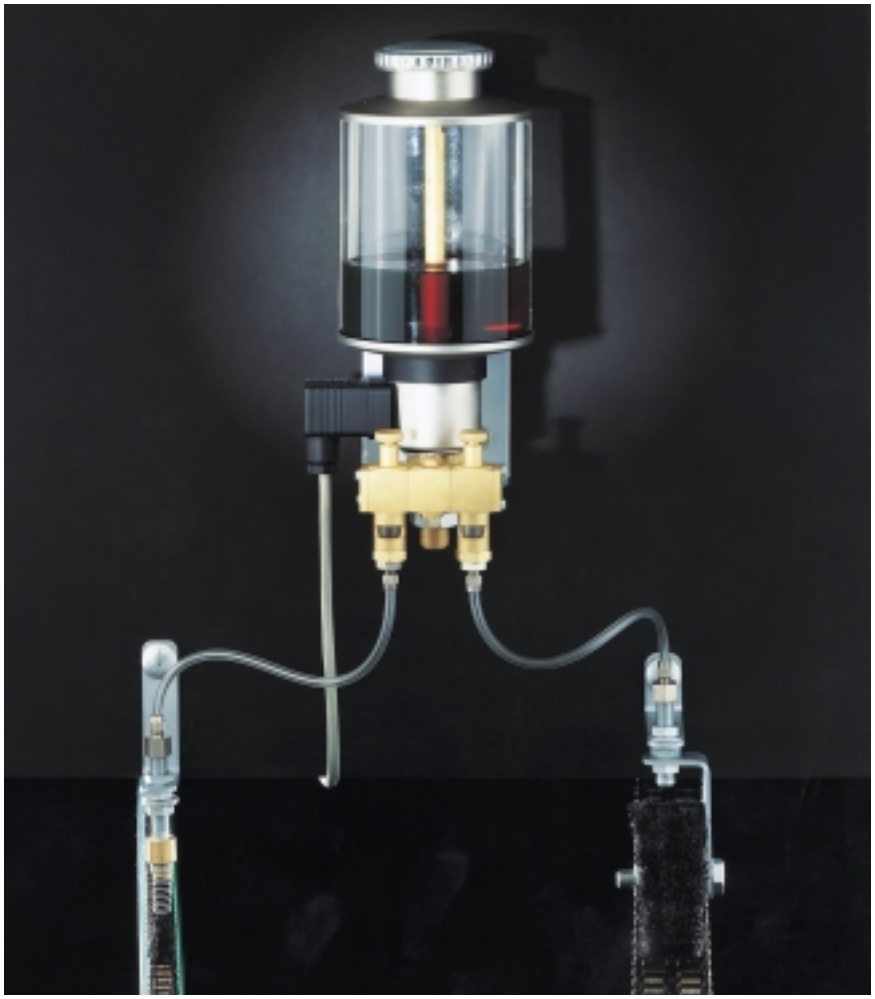

Murtfeldt lubrication systems – the economical solution

Many years' experience of dose-rate drip-feed lubrication, plus continuous cooperation with designers as well as users, have gone into developing this sophisticated chain lubrication system offering reliable performance even under the most severe operating conditions – and all that at an attractive price, too.

Our manual and automatic drip-feed lubrication and associated maintenance program represent a unique combination of reliable technology, reliable operation and reliable value for money.

Please use our assembly drawings on pp. 259–262 for your enquiries.

Lubrication System and Central Lubrication Unit

These manual and automatic lubrication systems rely on the forces of gravity to deliver their oil, enabling them to operate without additional pump drives.

They therefore have to be installed with their lubricant filler bowl being positioned above the lubrication points.

An integrated pump allows the central lubrication units to be fitted in any position. Depending on pump type (EET/200 / EET/300), heads of up to 10m are possible.

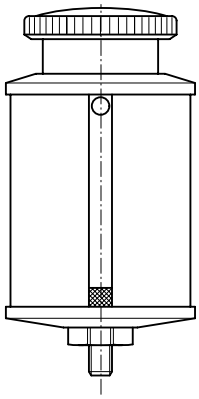

Filler bowl capacity 500 – 3000ml
Filler bowl capacity 5000 – 9000ml

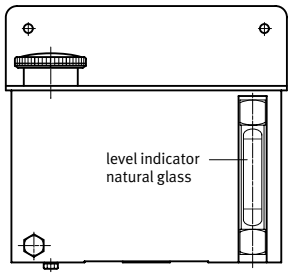

For storing oil and other media. All threaded joints allow both pipe and hose connection.

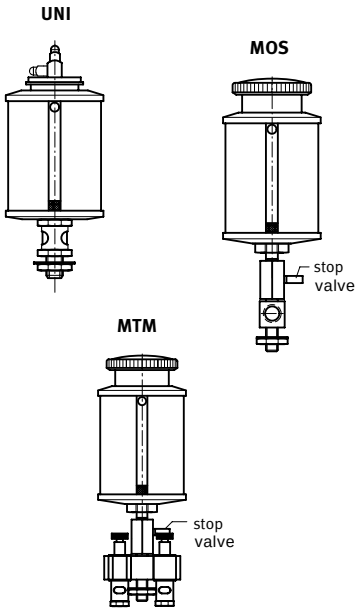

UNI
Drip feeder for one lubrication point
Filler bowl capacity 10 – 3000ml

MOS
Single drip feeder
for 1 – 12 lubrication points
Filler bowl capacity 140 – 3000ml

MTM
Multiple drip feeder
(up to 12 drip feeders),
filler bowl capacity 140 – 3000ml
These systems are easy to instal, needing only to be manually opened and shut by a machine/plant operator. Combined with ETR or MTR drip feeders, MOS oil dispensers are used for oil drip-dosing.

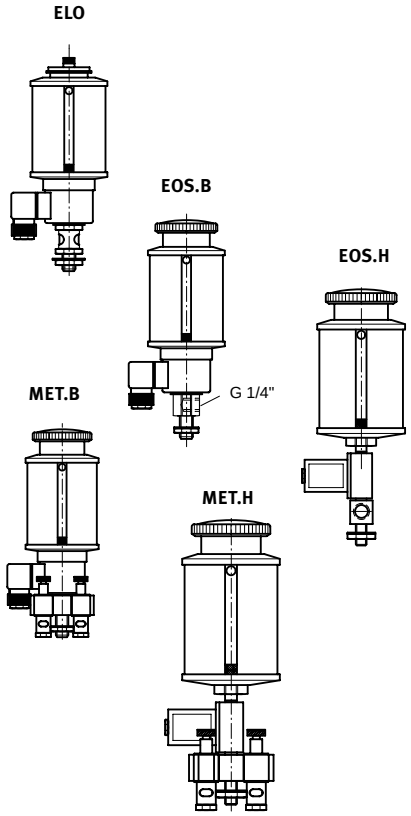

Automatic Lubrication Systems

ELO
Electric drip feeder
for one lubrication point
Filler bowl capacity 36 – 3000ml

EOS.B/EOS.H
Electric drip feeder
for 1 – 12 lubrication points
Filler bowl capacity 140 – 3000ml
Combined with ETR or MTR drip feeders, EOS.B and EOS.H electric oil dispensers are used for oil drip-dosing. Min. setting 1 – 2 drops per minute.
45 drops approximate 1 cm^3 of lubrication depending on viscosity.

MET.B/MET.H
Multiple electric drip feeder
(max. 12 drip feeders)
filler bowl capacity 140 – 3000ml
These automatic lubrication systems are electrically controlled by the main installation/plant circuit, automatically opening at start-up and closing at shut-down, thus preventing operator errors.

Central lubrication units with pump

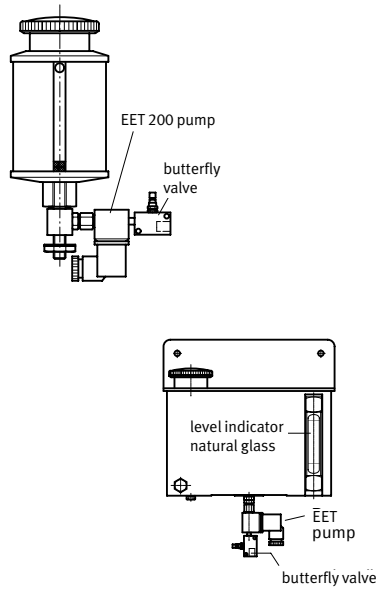

EPO 500 to **3000**
central lubrication unit

EPO 5000/9000 ET
central lubrication unit

EPO
The EPO central lubrication unit consists of an electric pump with butterfly valve and a glass filler bowl with a capacity of 0.5 to 3.0 litres or one in aluminium with either 5 or 9 litre capacity. The pump is designed as a discharge system for intermittent delivery of light to medium machine/chain oils up to a head of approx. 10m at 1.5bar max. pressure. ETR or MTR oil drip feeders distribute the oil to the individual lubrication points. For special applications, please contact our application engineers.

Electronic Time Control

Freely programmable control unit with four different functions:

- timer
- inverted timer
- turn-on pulse
- turn-on delay

Simple control technology. A freely programmable unit capable of additional control functions (e.g. clock relay, time switches, SPS stored program control etc).

DIP switch programming: The eight-pole DIP switch allows the module to be programmed for four functions and eight ON/OFF ranges.

Voltage ranges
24–48 V/50–60 AC/DC
110–230 V/50–60 AC

Accessories

oil drip feeder

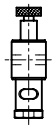

ETR 10490
MTR 2-12

roller lubrication

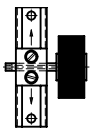

RSM/RSM-B

fixing bracket

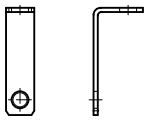

BWK

magnetic float switch

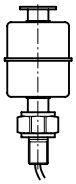

SMM 50
(nickel-plated brass, float stainless steel)
SMM 50
(stainless steel)

oil brush

SPR round brush

SPF flat brush

brush holder

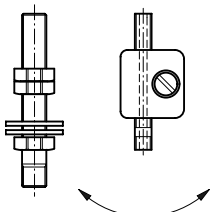

PHA
PHB

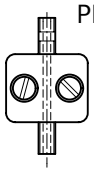

PHC

fixing bracket for oil container

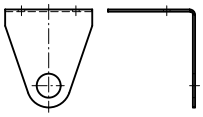

BWG1
BWG2

Fixing rails for brush holder PHB/PHC

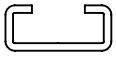

C5

Assembly of MTM/MET Lubrication System

Line Installation with PVC or PA 12 W Hose

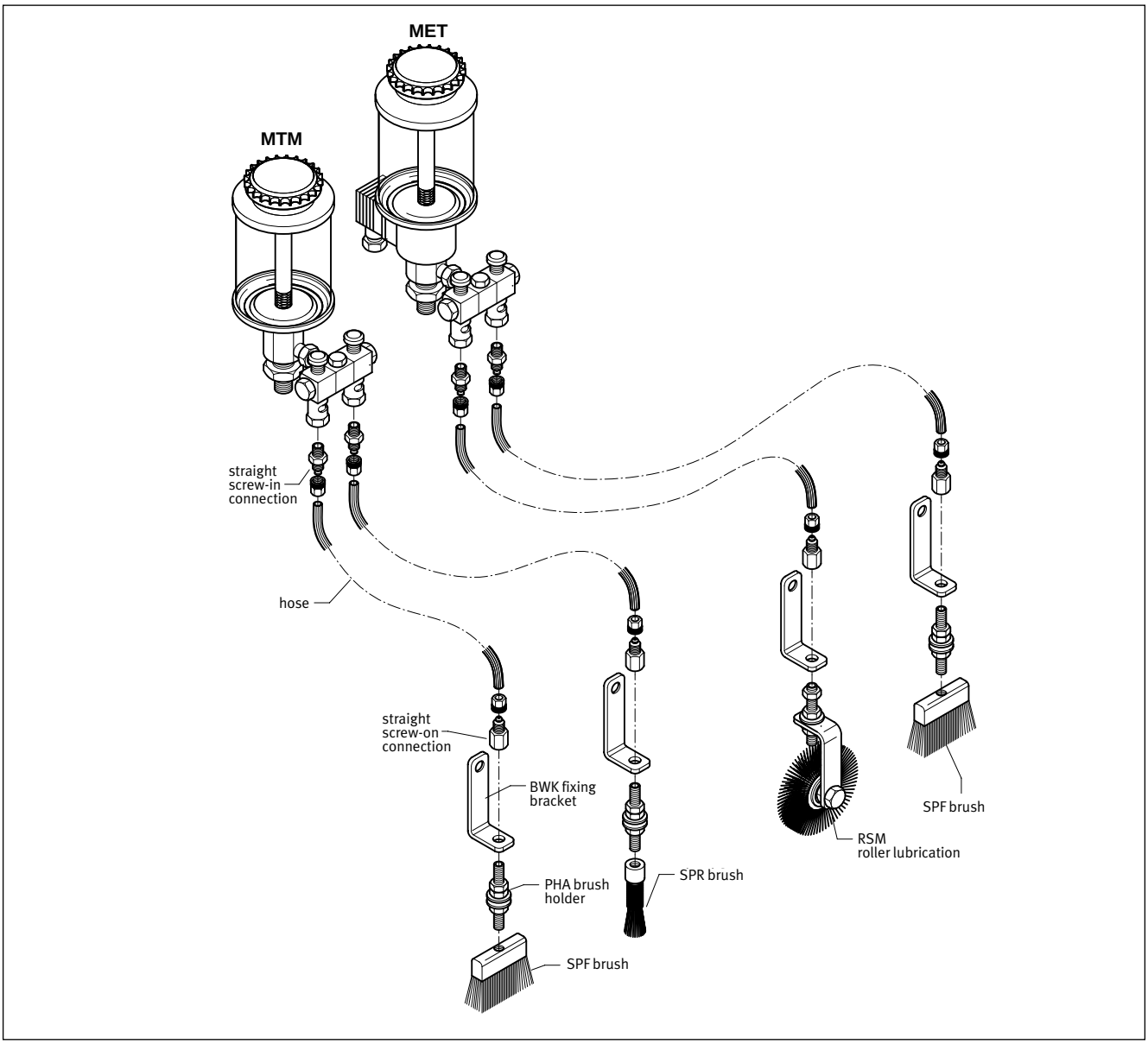

- ☐ MTM oil drip feeder
- ☐ MET oil drip feeder
  - ☐ 3000ml
  - ☐ 2000ml
  - ☐ 1000ml
  - ☐ 500ml
  - ☐ 200ml
  - ☐ 140ml
- ☐ straight screw-in connection
- ☐ PVC hose
- ☐ PA 12 hose
- ☐ BWK fixing bracket
- ☐ PHA brush holder
- ☐ SPR brush
- ☐ SPF brush
- ☐ RSM roller lubrication

Assembly of MOS/EOS Lubrication System

Line Installation with PVC or PA 12 W Hose

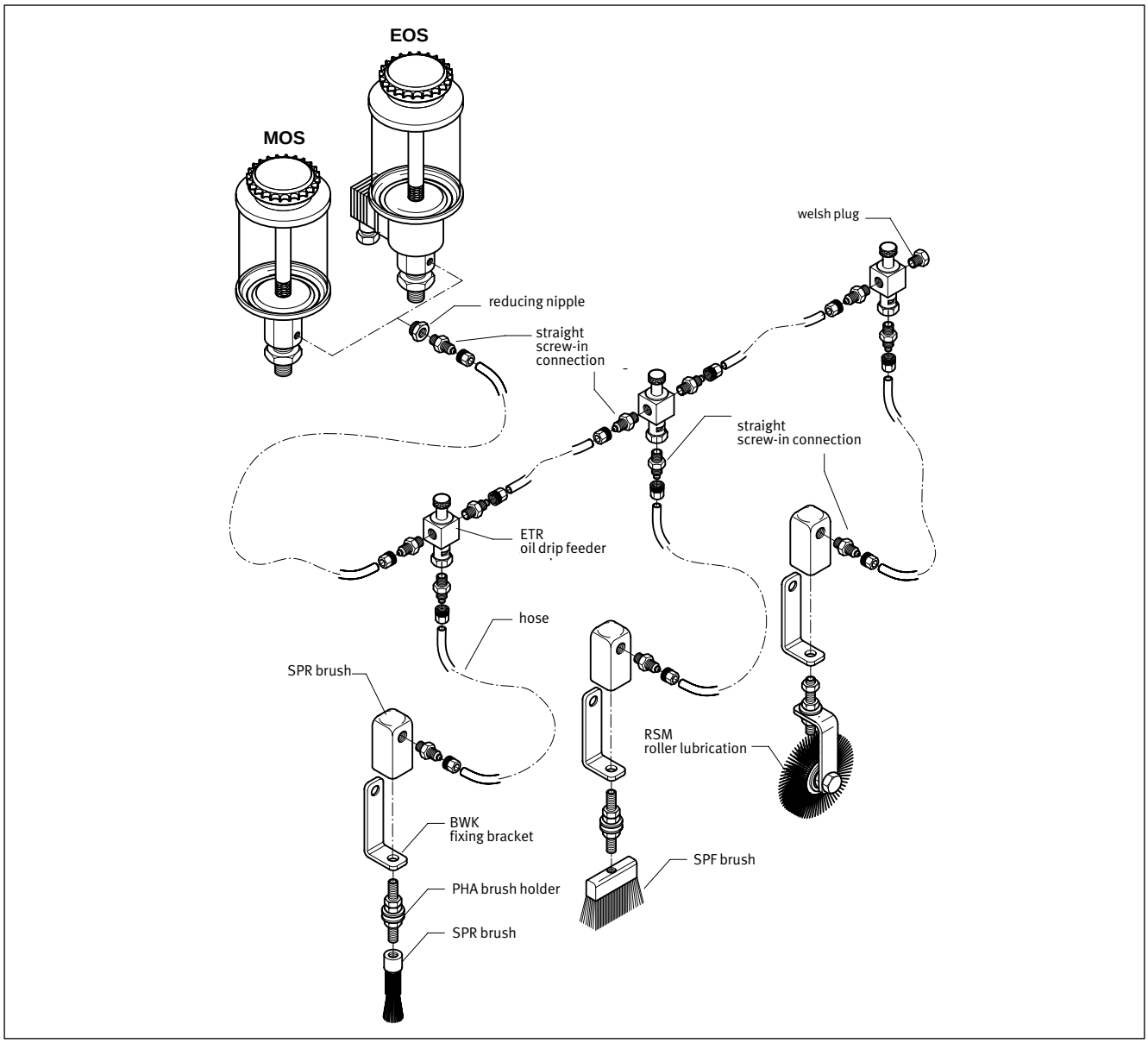

☐ MOS oil drip feeder ☐ EOS drip feeder

- ☐ 3000ml
- ☐ 2000ml
- ☐ 1000ml
- ☐ 500ml
- ☐ 200ml
- ☐ 140ml

- ☐ reducing nipple
- ☐ straight screw-in connection
- ☐ ETR oil drip feeder
- ☐ PVC hose
- ☐ PA 12 hose
- ☐ elbow
- ☐ BWK fixing bracket
- ☐ PHA brush holder

- ☐ SPR brush
- ☐ SPF brush
- ☐ RSM roller lubrication

Assembly for EPO Central Lubrication Unit

for Discharge Operation

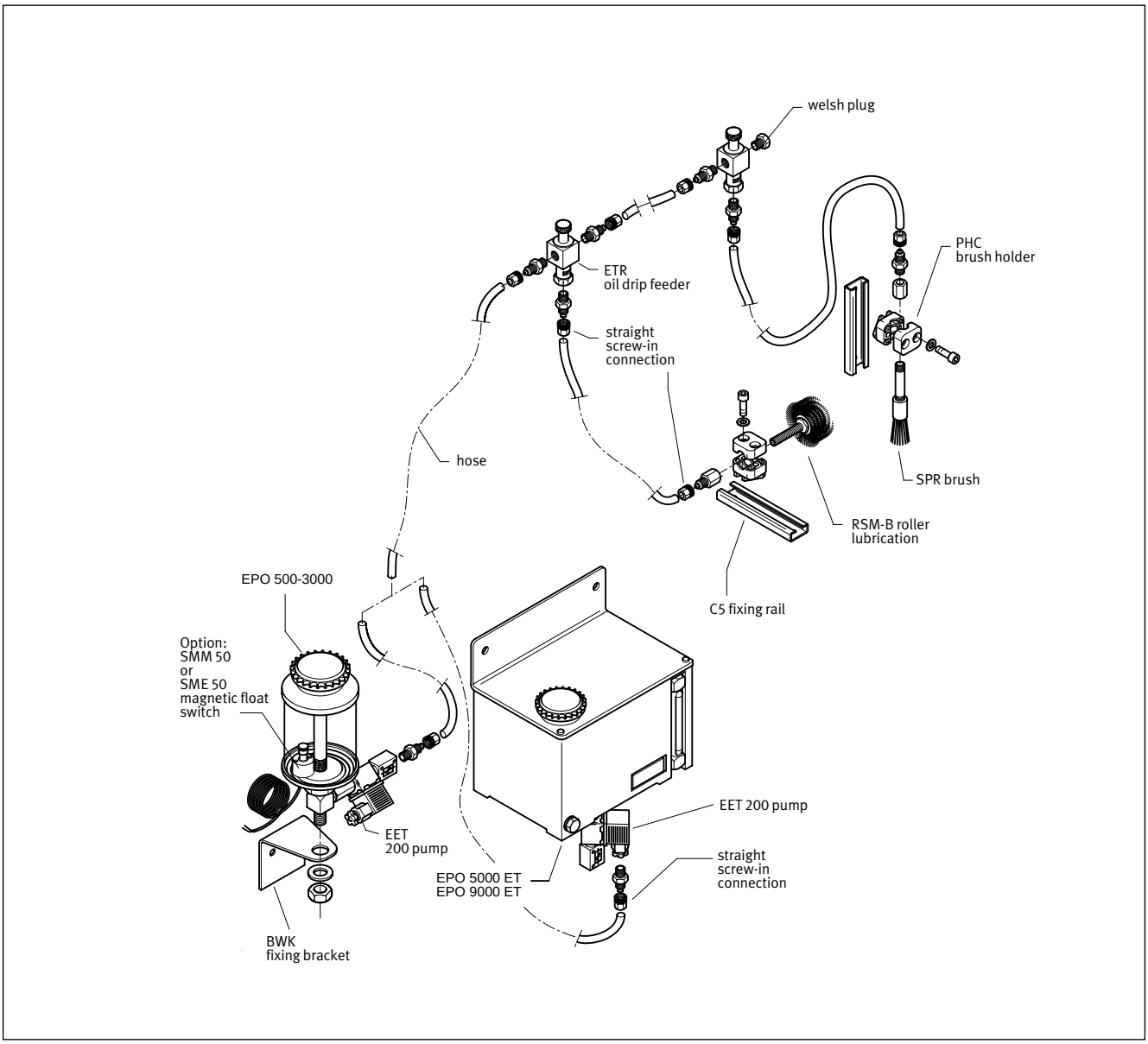

- ☐ EET 200 central lubrication unit with pump
  - ☐ 9000ml
  - ☐ 5000ml
  - ☐ 3000ml
  - ☐ 2000ml
  - ☐ 1000ml
- ☐ Magnetic float switch
  - ☐ SMM 50
  - ☐ SME 50
- ☐ BWK fixing bracket
- ☐ PVC hose
- ☐ PA 12 hose
- ☐ straight screw-in connection
- ☐ ETR oil drip feeder
- ☐ PHC brush holder
- ☐ C5 fixing rail
- ☐ SPR brush
- ☐ RSM-B roller lubrication

Line Installation with CU Pipe

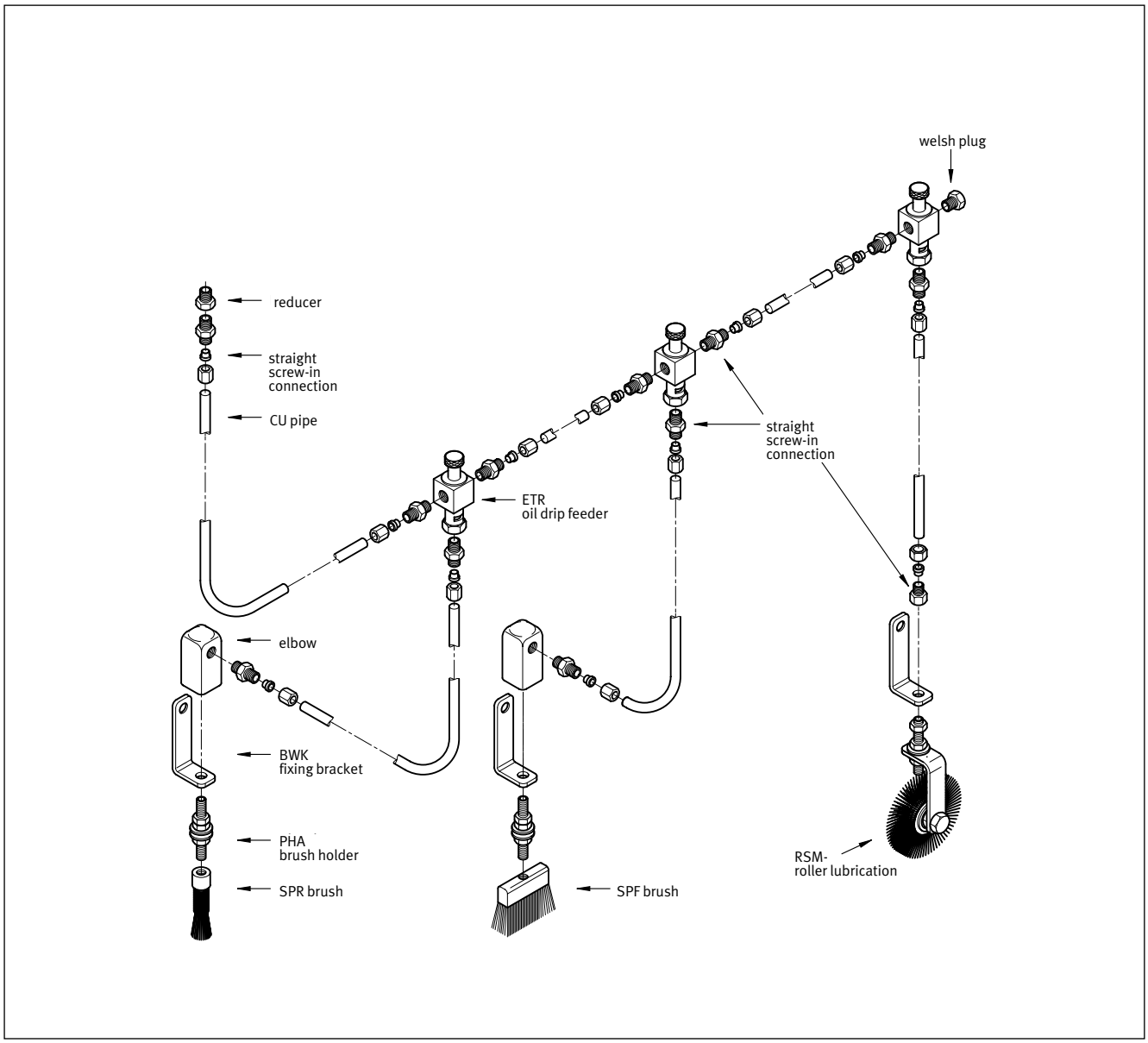

- ☐ reducer
- ☐ straight screw-in connection
- ☐ CU pipe
- ☐ ETR oil drip feeder
- ☐ elbow
- ☐ BWK fixing bracket
- ☐ PHA brush holder
- ☐ SPR brush
- ☐ SPF brush
- ☐ roller lubrication RSM

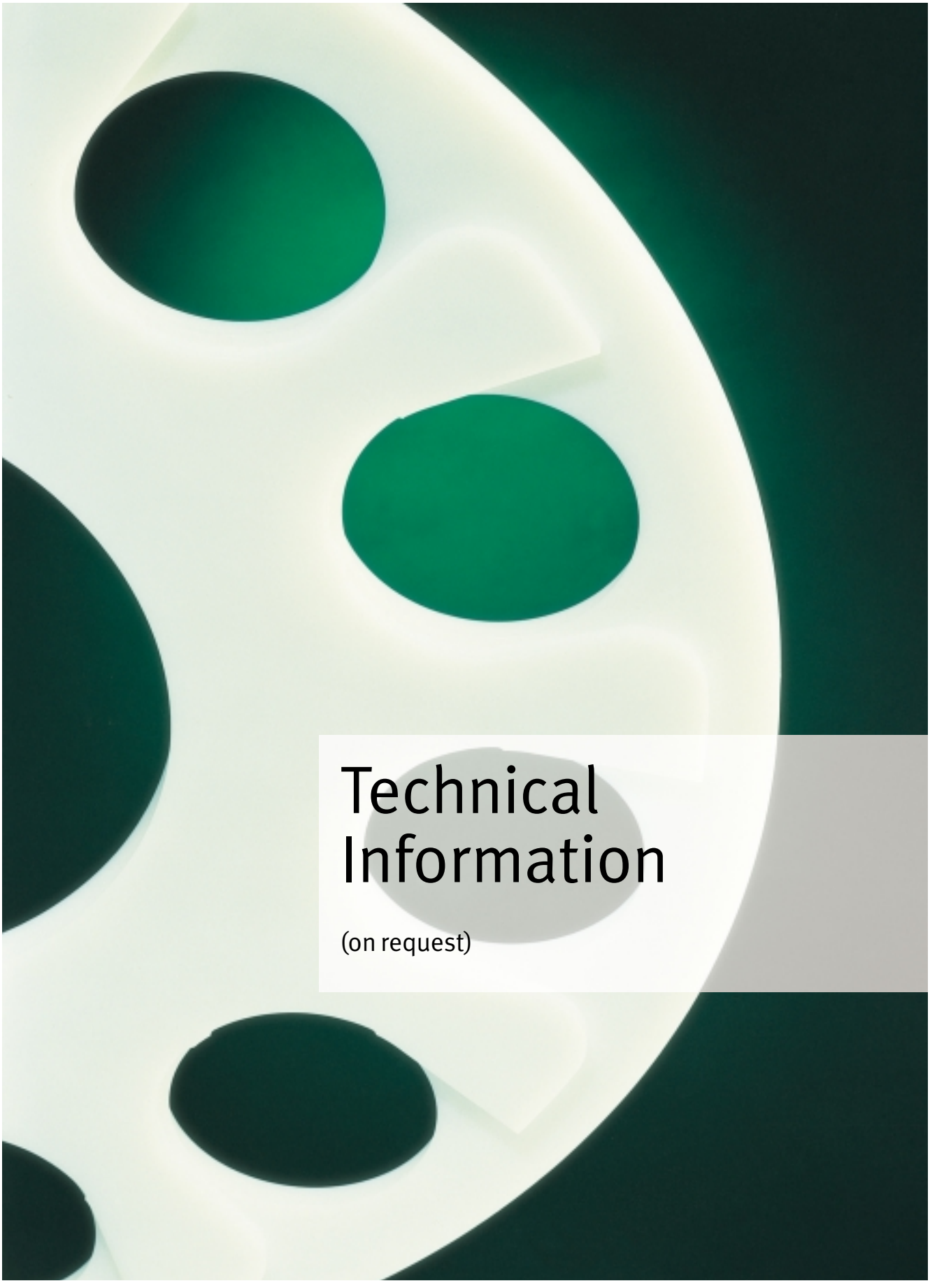

Technical Information

(on request)

15
45
R69
R35
A

The Fast Track to Solutions

Murtfeldt Plastics

❶ **Please take out or copy this page, fill it in and** fax to +49-2 31-2 06 09 92

Yes, please call me.
My tel. no. is:

◯ Yes, I would like more information on:

◯ Chemical Resistances
◯ Bonding/Welding
◯ Machining
◯ Installation of Chain/Belt Tensioners
◯ Tolerances for Machining Plastics
◯ Individual Worm Conveyors
◯ Chain Racks
◯ Guiding Rollers
◯ Rope Pulleys
◯ Chain Guides
◯ Spur Gears
◯ Calculating Radial Bearings
◯ Designing with Steel C-Profiles
◯ Chain and Belt Tensioners
◯ Comprehensive Catalogue

Name: _____

Address: _____

_____

_____

❶ If you prefer, you can also post this form to us or send us a more detailed letter.
❷ If you want to telephone us, please call our infoline +49-2 31 - 2 06 09-0
❸ If you would like us to call you back, please leave your tel. no.
❹ More information is also available at our website on www.murtfeldt.de
❺ Our e-mail address is info@murtfeldt.de

Ø36 ±0.1
Ø42H11